IMPACT COLLECTION
SERIES 7600i MULTI-SLIDE DOOR

PRODUCT DATA SHEET

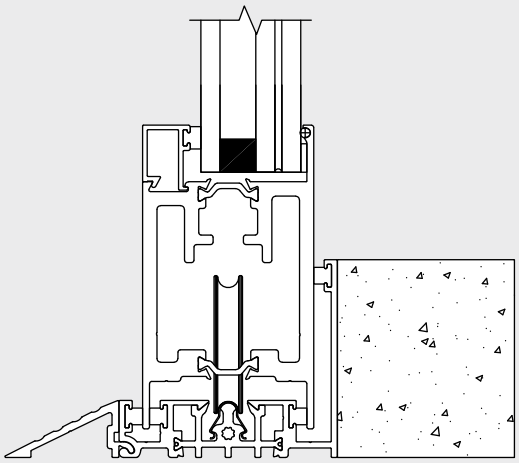

Impact Collection
Series 7600i Multi-Slide Door

Packed with innovations that address energy, structural, and impact requirements. With the Series 7600i Multi-Slide Door, the U-values are industry leading. The opening sizes are extreme. The sightlines are narrow. Impact-rated glass brings added protection to a contemporary moving glass wall, with virtually unlimited possibilities for customization.

Energy Efficiency

- (~1.3" OA) 5.7 mm Tempered E366 | 13 mm spacer | 5.7 mm Heat Strengthened /0.090" SGP
- .31 U-value

Hardware

- 1.81" Quad-Zilla roller
- Flush-mounted handle
- Premium handle
- Contemporary handle
- Concealed locking system

Options

Our AAMA-certified, sealed stainless steel ball bearing rollers come in a standard 1.81" size Quad-Zilla rollers. A concealed stainless steel multipoint
lock ensures panel security.

Finishes and Colors

Finishes are available in-stock or as designer selections, and they can be customized to match nearly any color. Split finishes are available in many combinations. Bronze Anodized and Satin Anodized come standard with a Class 1 coating thickness for increased smoothness and durability. Our designer colors include a high-quality paint finish that conforms to a minimum rating of AAMA-2605, currently the highest rating for organic finishes.

Performance Table

Frame Depth	2.87" Per Track
AAMA Product Designation (AAMA/WDMA/CSA101/I.S.2/A440 Designation)	DP50
Test Configuration	OXXX 61" x 119" Panel
Air Infiltration (Per ASTM E 283)	24 cfm/sf @1.57 psf
CSA A440 Air	A2
Water Resistance (Per ASTM E 547)	7.5 psf
Forced Entry Resistance	ASTM F842 Type B Grade 10
U-Factor (Per NFRC 100)*	0.31
CR (Per NFRC 500)*	59
CRF Frame (Per AAMA 1503)	N/A

Actual values may vary depending on product specifications and configuration.
* Glass Makeup = 1" OA E366/Argon/Clear

IMPACT COLLECTION
SERIES 7600i MULTI-SLIDE DOOR

PRODUCT DATA SHEET

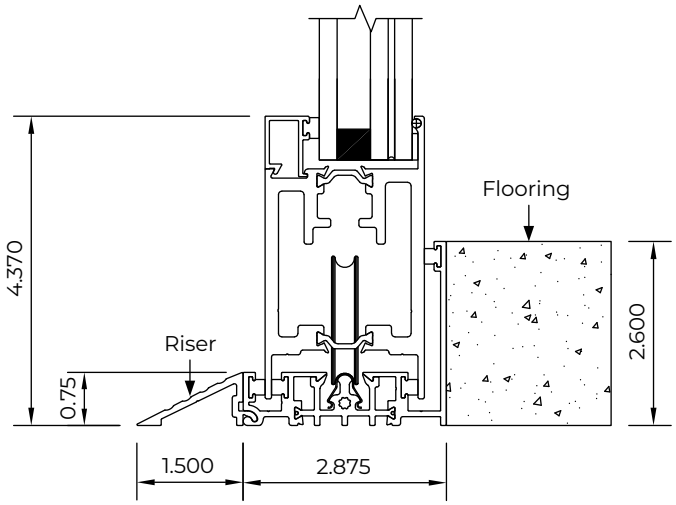

High-Performance 2.6" Threshold With Tandem and Quad-Zilla With Ext. Riser Option

IMPACT

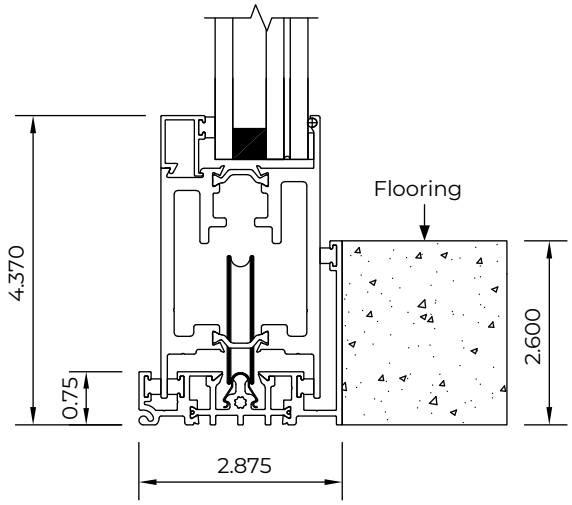

High-Performance 2.6" Threshold With Tandem and Quad-Zilla

IMPACT

IMPACT COLLECTION
SERIES 7600i MULTI-SLIDE DOOR

PRODUCT DATA SHEET

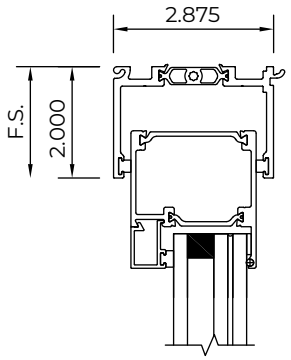

Head Condition

IMPACT

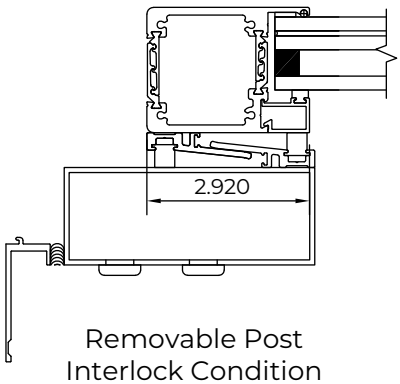

Removable Post
Interlock Condition

IMPACT

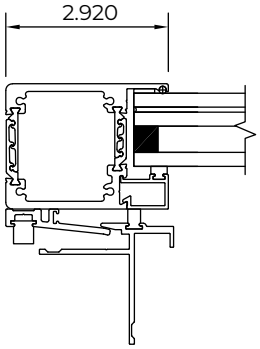

Post Interlock Condition

IMPACT

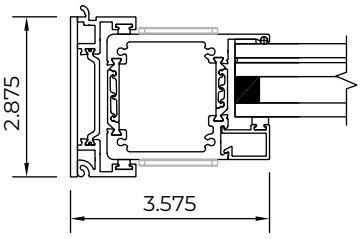

Lock Jamb Condition

IMPACT

IMPACT COLLECTION
SERIES 7600i MULTI-SLIDE DOOR

PRODUCT DATA SHEET

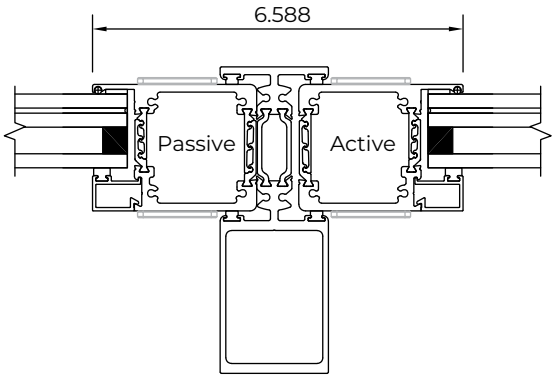

Bi-Parting Condition

IMPACT

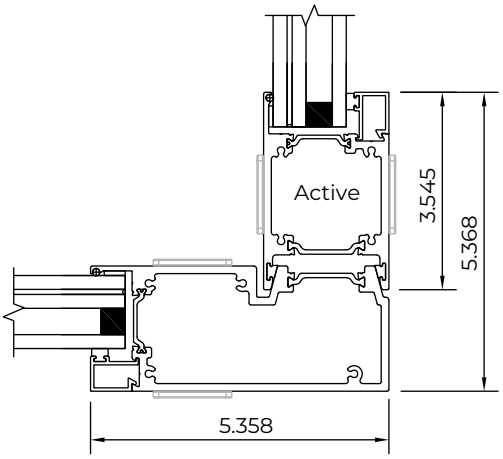

90-Degree Condition

IMPACT

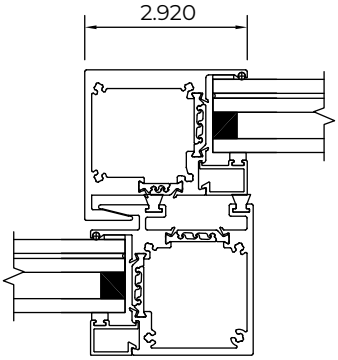

Interlocking Condition

IMPACT

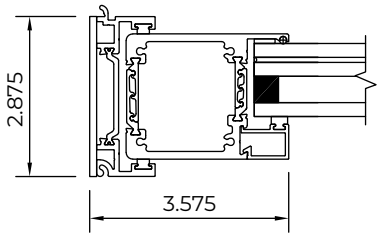

Fixed Jamb Condition

IMPACT

IMPACT COLLECTION
SERIES 7600i MULTI-SLIDE DOOR

PRODUCT DATA SHEET

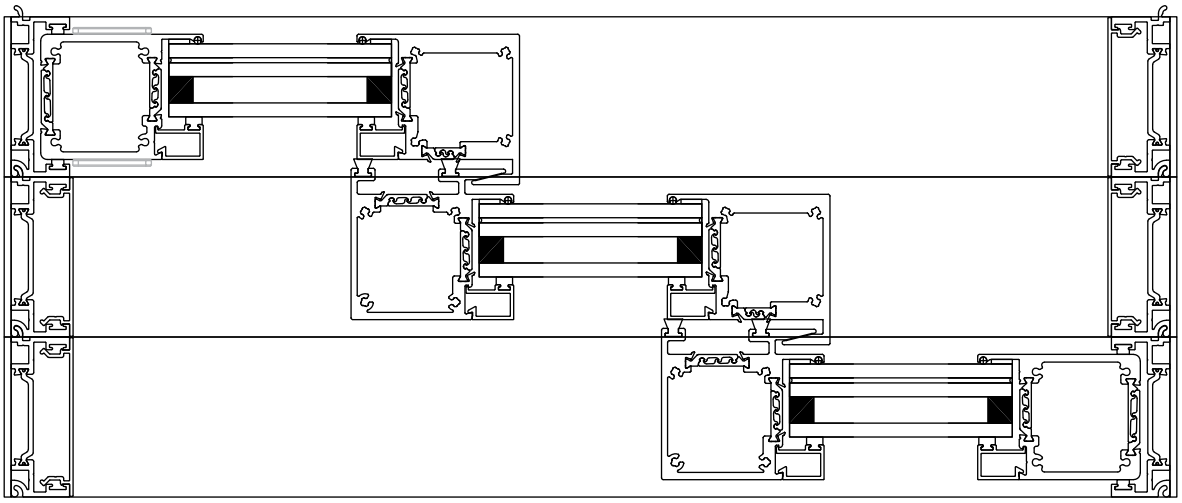

Horizontal Section Of
3-Panel Stacking Door Or 2XO

IMPACT

IMPACT COLLECTION
SERIES 7600i MULTI-SLIDE DOOR

PRODUCT DATA SHEET

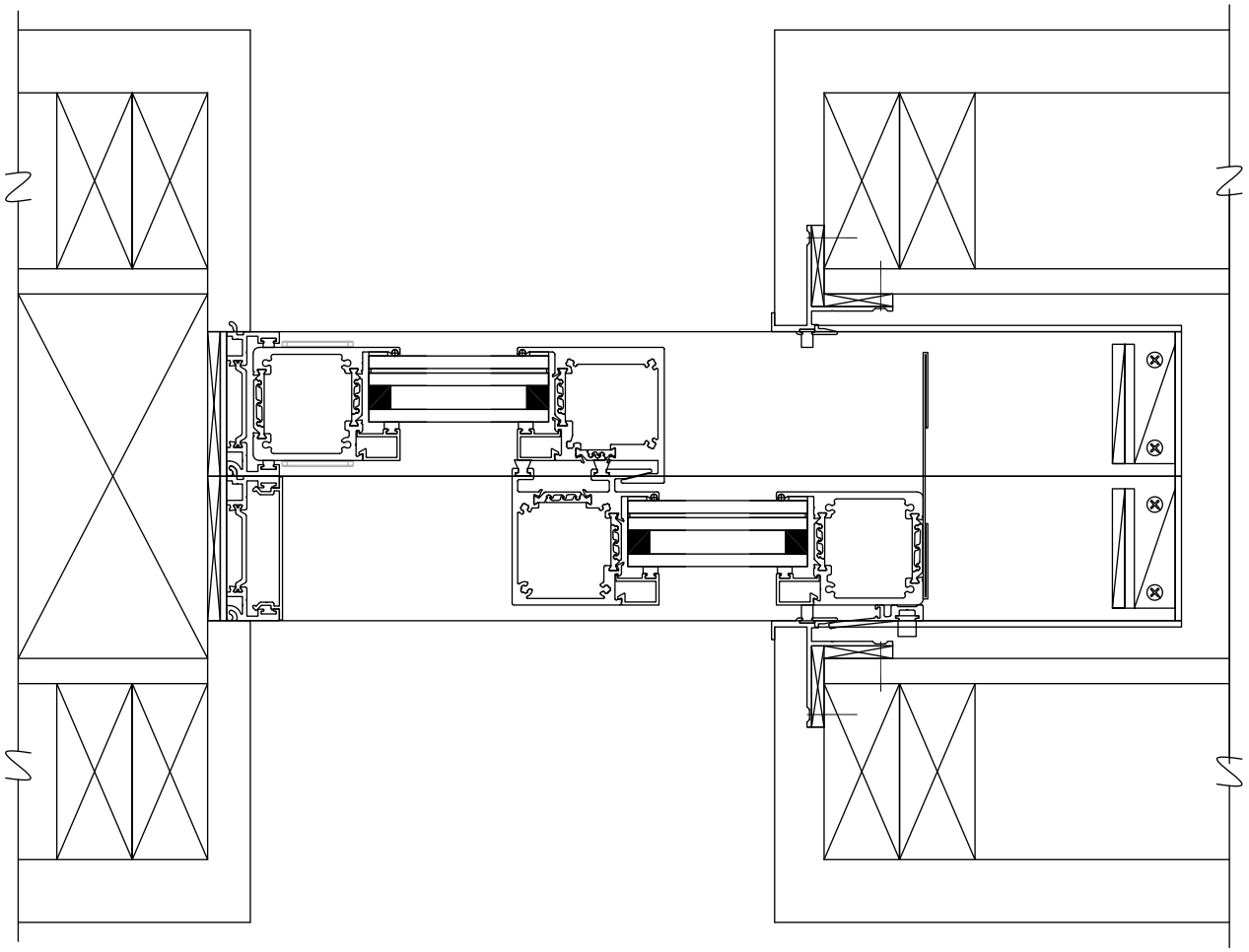

Horizontal Section Of 2-Panel Pocket Door Or 2XP

IMPACT

IMPACT COLLECTION
SERIES 7600i MULTI-SLIDE DOOR

PRODUCT DATA SHEET

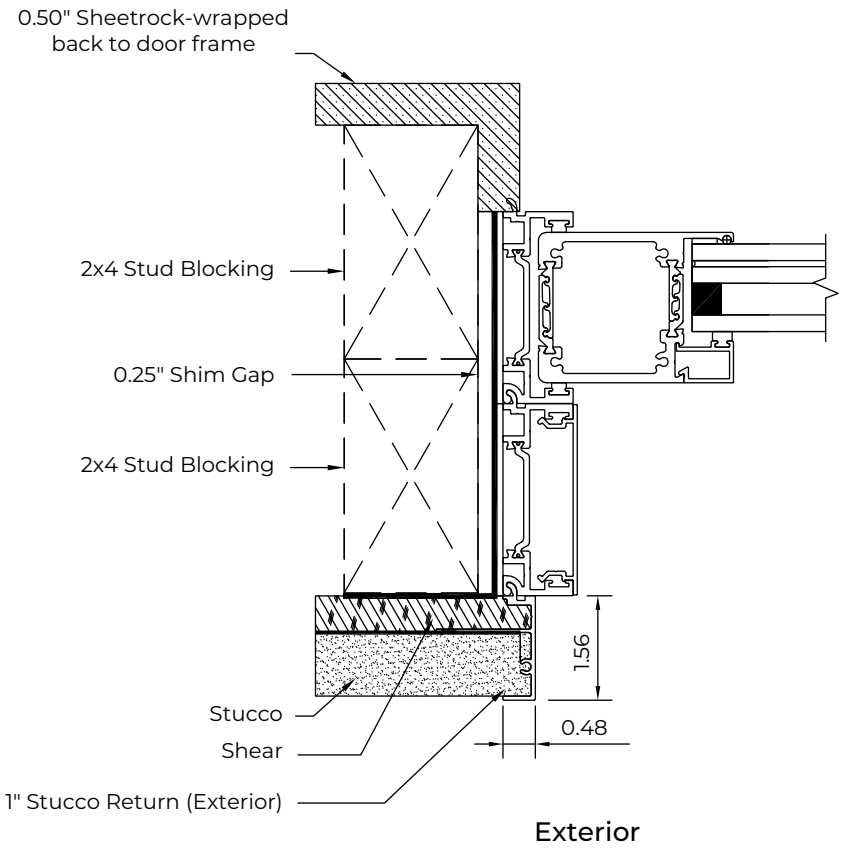

1" Stucco Return Wall Construction Profile at
Stud Multi-Slide Door Jamb Application

IMPACT

IMPACT COLLECTION
SERIES 7600i MULTI-SLIDE DOOR

PRODUCT DATA SHEET

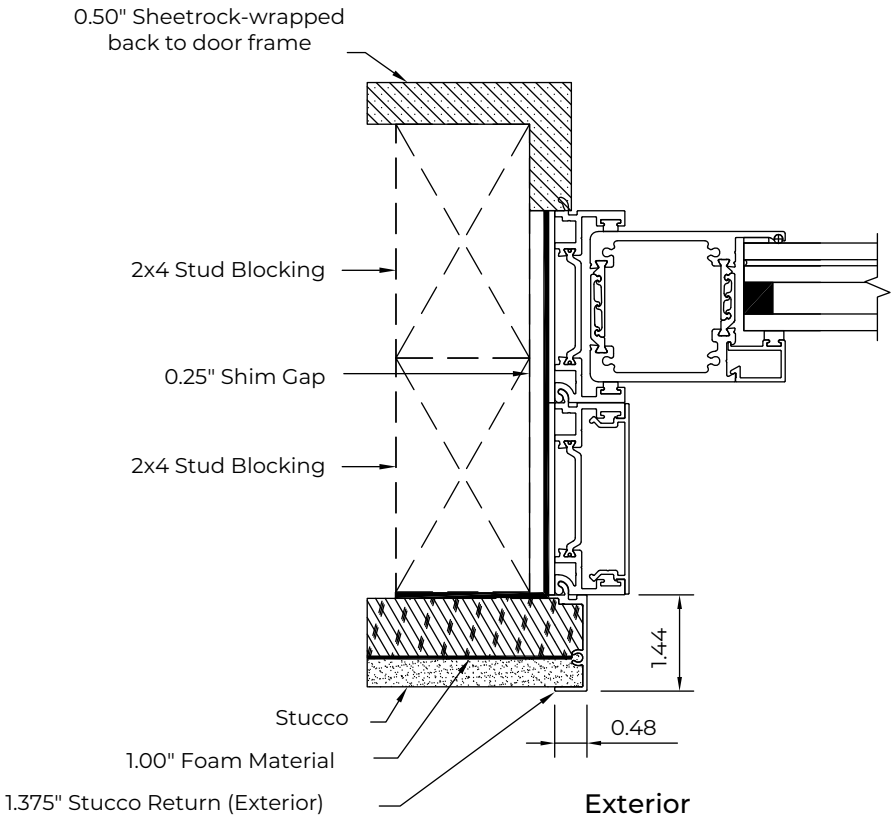

1.375" Stucco Return Wall Construction Profile at
Stud Multi-Slide Door Jamb Application

IMPACT