PERFORMANCE SERIES 7670 CASEMENT WINDOW

PRODUCT DATA SHEET

FOR MORE CAD DETAILS SCAN HERE

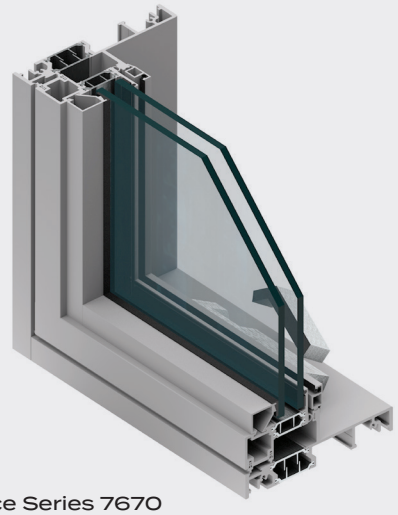

Performance Series 7670 Casement Window

The Series 7670 Casement Window, which hinges on the side and swings outward to the left or right, combines clean design and optimal performance with a commitment to superior craftsmanship. Designed with a 5.875” frame depth (ideal for security glass and noise reduction), it can be integrated with our hinged doors, sliding doors, and fixed window walls for maximum views and ventilation. It is available in widths from 18” to 36” and heights from 18” to 95.5.” The window is tested for air, water, and structural performance and is certified by the NFRC and AAMA.

Energy Efficiency

- Low-E, argon-filled dual-paned, triple-paned glass
- .35 U-value

Hardware

- Aluminum screens

Options

Butt hinges and a roto operator enable easy operation. All fasteners are stainless steel, and the Series 7670 Casement features a hidden multi-point locking system. Designed to create a sleek profile, the Series 7670 features new hinge hardware and contemporary handles. Durable aluminum-frame screens complement the window’s clean, contemporary style. Screen frames match the window frame’s color and are mounted to the interior. The Series 7670 Push-Out Casement opens easily with the turn of the handle and a light push. Stainless steel four-bar hinges with an adjustable tensioning device keep the sash in place when open. It is available in widths from 16” to 36” and heights from 16” to 72”.

Finishes and Colors

Finishes are available in-stock or as designer selections, and they can be customized to match nearly any color. Split finishes are available in many combinations. Bronze Anodized and Satin Anodized come standard with a Class 1 coating thickness for increased smoothness and durability. Our designer colors include a high-quality paint finish that conforms to a minimum rating of AAMA-2605, currently the highest rating for organic finishes.

Performance Table

Frame Depth	5 7/8”
AAMA Product Designation (AAMA/WDMA/CSA101/I.S.2/A440 Designation)	CW-PG50-36x94-C
Test Configuration	36” x 94”
Air Infiltration (Per ASTM E 283)	.02 cfm/sf @1.57 psf
CSA A440 Air	A3
Water Resistance (Per ASTM E 547)	7.5 psf
Forced Entry Resistance	ASTM F588 Type B and CAWM 301 Type II
U-Factor (Per NFRC 100)*	0.35
CR (Per NFRC 500)*	62
CRF Frame (Per AAMA 1503)	70

Actual values may vary depending on product specifications and configuration.
* Glass Makeup = 1” OA E366/Argon/Clear

PERFORMANCE SERIES 7670 CASEMENT WINDOW

PRODUCT DATA SHEET

FOR MORE CAD DETAILS SCAN HERE

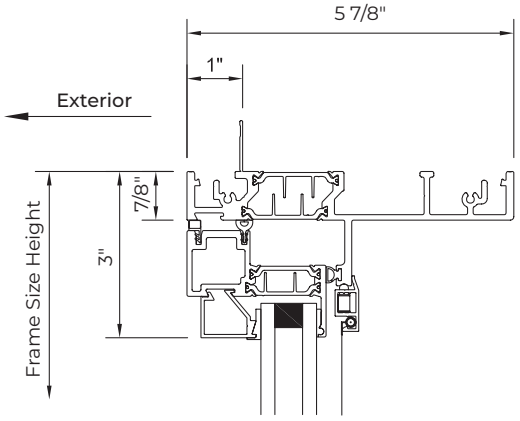

Series 7660 Awning And Series 7670 Casement Window
Head - Nail Fin Frame

PERFORMANCE SERIES 7670 CASEMENT WINDOW

PRODUCT DATA SHEET

FOR MORE CAD DETAILS SCAN HERE

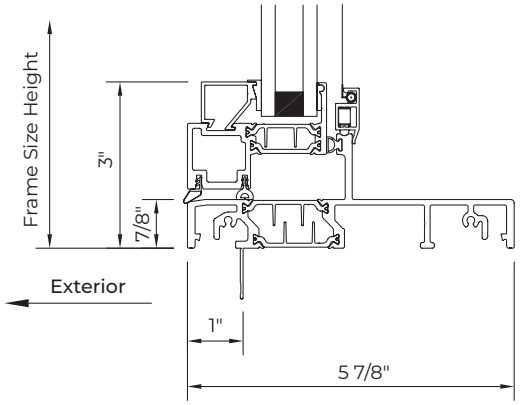

Series 7660 Awning And Series 7670 Casement Window
Sill - Nail Fin Frame

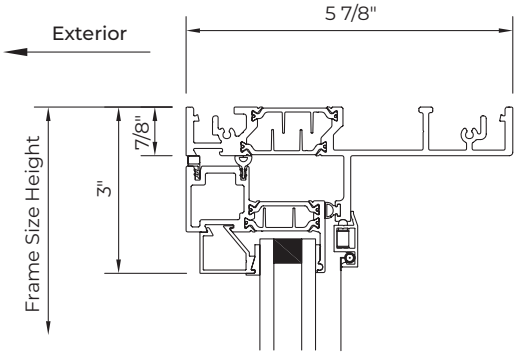

Series 7660 Awning And Series 7670 Casement Window
Head - Equal Leg Block Frame

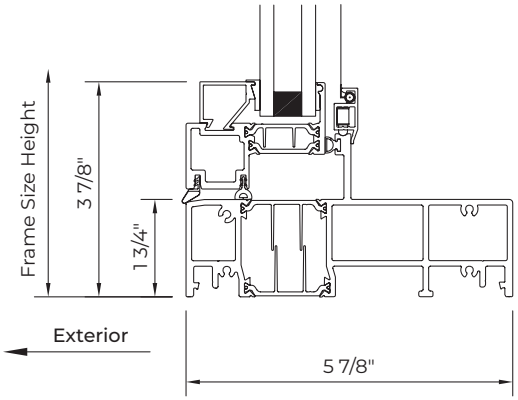

Series 7660 Awning And Series 7670 Casement Window
Sill - Equal Leg Block High Frame

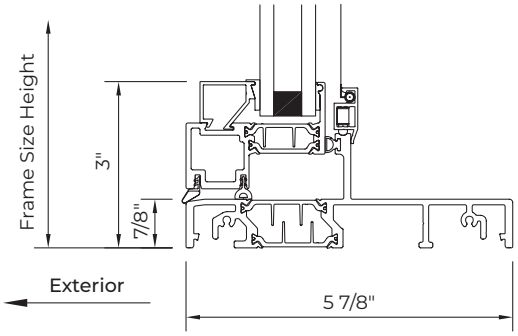

Series 7660 Awning And Series 7670 Casement Window
Sill - Equal Leg Block Frame

PERFORMANCE SERIES 7670 CASEMENT WINDOW

PRODUCT DATA SHEET

FOR MORE CAD DETAILS SCAN HERE

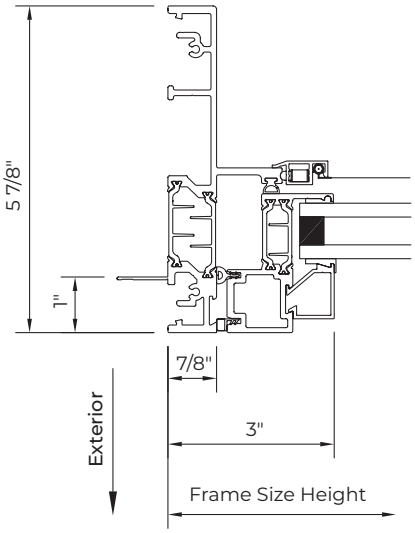

Series 7660 Awning And Series 7670 Casement Window
Jamb - Nail Fin Frame

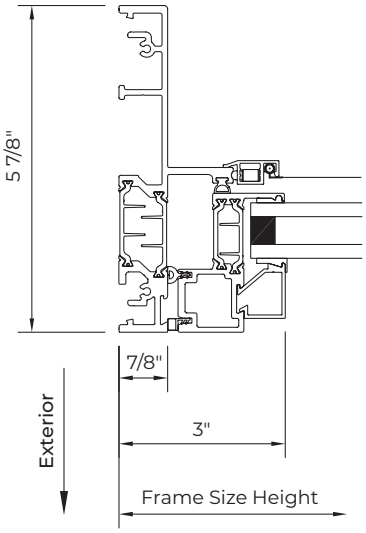

Series 7660 Awning And Series 7670 Casement Window
Jamb - Equal Leg Block Frame

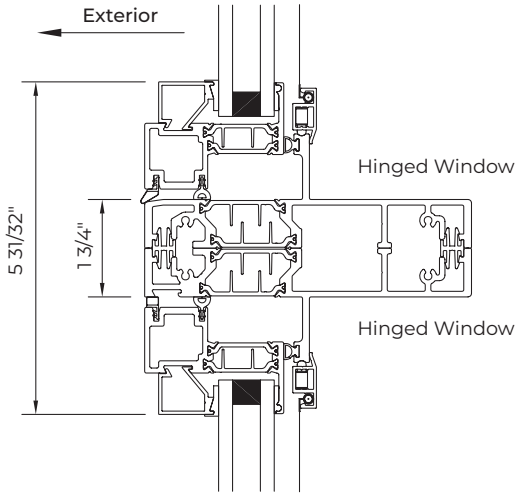

Series 7660 Awning And Series 7670 Casement Window
Horizontal Mull

PERFORMANCE SERIES 7670 CASEMENT WINDOW

PRODUCT DATA SHEET

FOR MORE CAD DETAILS SCAN HERE

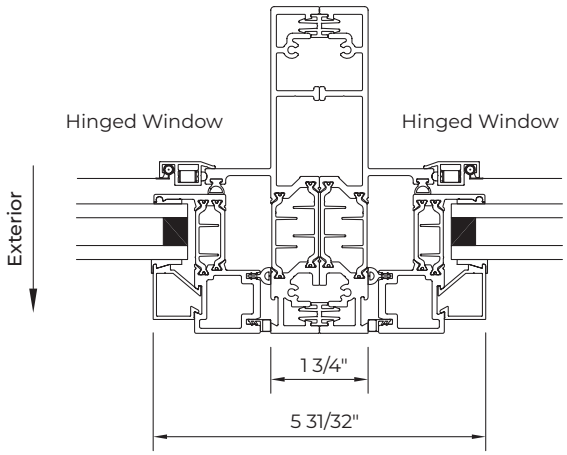

Series 7660 Awning And Series 7670 Casement Window
Vertical Mull