MILGARD®

C700
Delta Mull

FIELD INSTALL

By MITER Brands™



C700 Delta Mull Components

MILGARD

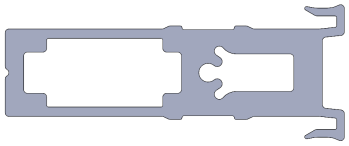

Mull Bar
EX7308MI

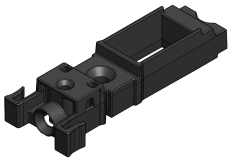

End Cap IM3121BL (Installed on the mull bar EX7308)

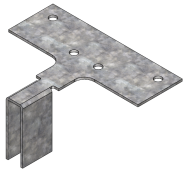

Mull Anchor
RF4302GA

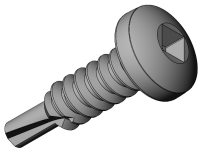

Fastener for Mull
FA8209SS

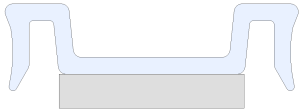

Pressure Plate
EX7309MI

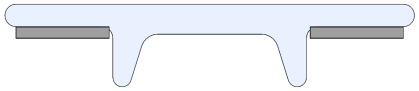

Mull Cover
PX5028XX



Interior Mull Cover (For Transom) EX7310XX



Fastener for Mull Anchor
FA0821SS

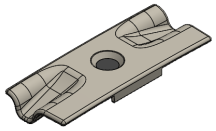

Sealing Cover
IM3122

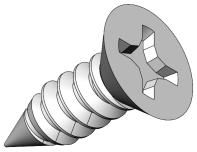

Fastener For Sealing Cover
FA0315XX



Assorted Accessories



Single Sided Foam Tape
SE4209ABL



Pecora 896 Sealant for Sealing SE0034CL

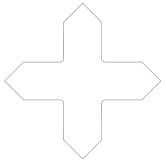

Corner Labels for Fin
LA0220MM

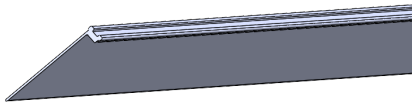

Fin for Fin Units
VA5084WH

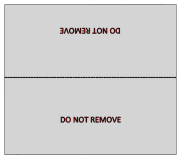

Mull Label for Mull Joint
LA0021MM

Other Tools & Materials Needed (not supplied)

- Impact drill with square drive SQ2 and Philips drive PH2
- Caulking gun
- Narrow rubber mallet
- Scissor
- Spreader or Spatula

MULLING DISCLAIMERS & CAUTIONS FOR FIELD MULLING

Assembly of the Delta Mull System is not a “do-it-yourself” project and should be installed only by experienced, qualified, and where required, licensed installation professionals.

Read this entire document before proceeding with the mulling of Milgard’s products. These instructions address only the mulling process for vertical and horizontal mulls to be installed in wood or steel frame construction. For units with a mounting fin, follow the Milgard’s Installation Recommendations for Mounting Fin Windows which provide additional information applicable to the installation of mounting fin windows, including preparation of the rough opening prior to mulling the windows. For units with no mounting fin (block frame), follow the Milgard’s Installation Recommendations for Flange (Z-Bar) and Finless Windows and the C700 Fastener Schedule which provide additional information applicable to the installation of windows with no mounting fin (block frame), including preparation of the rough opening prior to mulling the windows.

These instructions are to be used only with products specifically ordered as combination (mulled) assemblies. Window products to be field-mulled must be identified as such on the order documents so the manufacturing plant can properly prepare the windows for field-mulling. If windows do not arrive prepared for use with this kit, do not move forward with installation and contact your Milgard representative. Read the instructions in full before starting the mulling process, and contact your Milgard representative if you have any questions.

Windows ordered for field-mulling will be delivered with a mull kit containing parts to be used when mulling the windows. Milgard’s mullion products are rated for performance based on the specific part and fasteners included with this mull kit. Any deviation from the mulling guidelines or substitutions/use of parts not provided with the kit could affect the performance of the window unit.

Proper anchoring of a mullion requires securing fasteners into rough opening framing members. This has the potential to impact the flashing and water management systems at a product opening. Consult the responsible system supplier or responsible owner, architect and/or builder to ensure that mullion anchoring is effective for the existing design and in compliance with applicable laws, site requirements and building codes.

Performance Grade ratings for mulled products can depend on many factors. Labels on individual window units may not represent the Performance Grade of a mulled assembly. Contact Milgard with any questions regarding rating of the combination assembly.

Inspect the mull and window product thoroughly before beginning the mulling process. Confirm the window units, once mulled, will match the size needed for the opening; measuring ½” smaller than the rough opening dimensions in width and height of the entire unit. Inspect and report any window product or mull damage to your Milgard representative prior to installation.

Jobsite and worker protections are recommended and may be required. Follow all manufacturers’ instructions for appropriate and safe use of protective equipment, tools, materials, hardware and site protections necessary for mulling the window products.

It is the sole responsibility of the owner, architect, and/or builder to select correct the products and ensure that installation is to be in compliance with applicable laws, site requirements, and building codes. Failure to follow these recommendations, local requirements, or good building practices may affect the availability of remedies under Milgard’s warranty

DO NOT mull more than 3 window units together (i.e. maximum of 2 C700 Delta mullions per window opening).
Field-mulled assembly size limitations.

Maximum horizontal mull length: 120”

Maximum vertical mull length: 120”

DO NOT install vertically and horizontally mulled windows in a single rough opening such that it creates a 3-way or 4-way joint (see diagram below). Structural support must be installed between units to avoid 3-way and 4-way joints. IMR products with a continuous frame may be mulled together as long as they do not exceed the maximum size limits.

INCOMPATIBLE MULLING CONFIGURATIONS

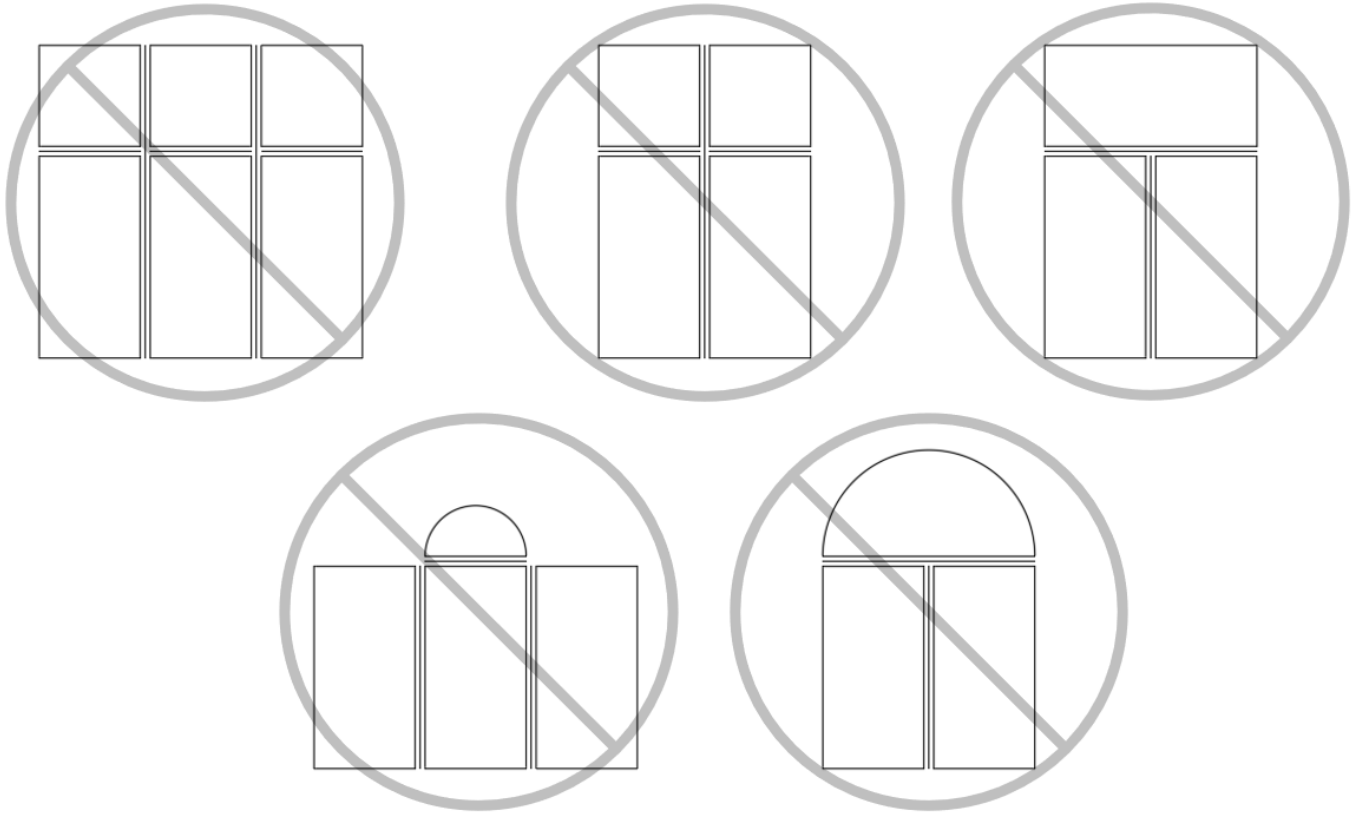

C700 Delta Mull Field Mull Instructions

MILGARD

The following instructions are for window-to-window or window-to-door mulled units. The following instructions are for vertical or horizontal mulled units. If mulling shape-to-window or shape-to-shape unit, refer to section “SHAPE”

Mull Sequence:

Start from one end and work across
Vertical: Left to Right OR Right to Left
Horizontal: Bottom to Top OR Top to Bottom

Step 1

Place unit onto a flat surface, exterior face down with the surface to mull towards you.
Ensure that the sealant is flush to the frame, if any.

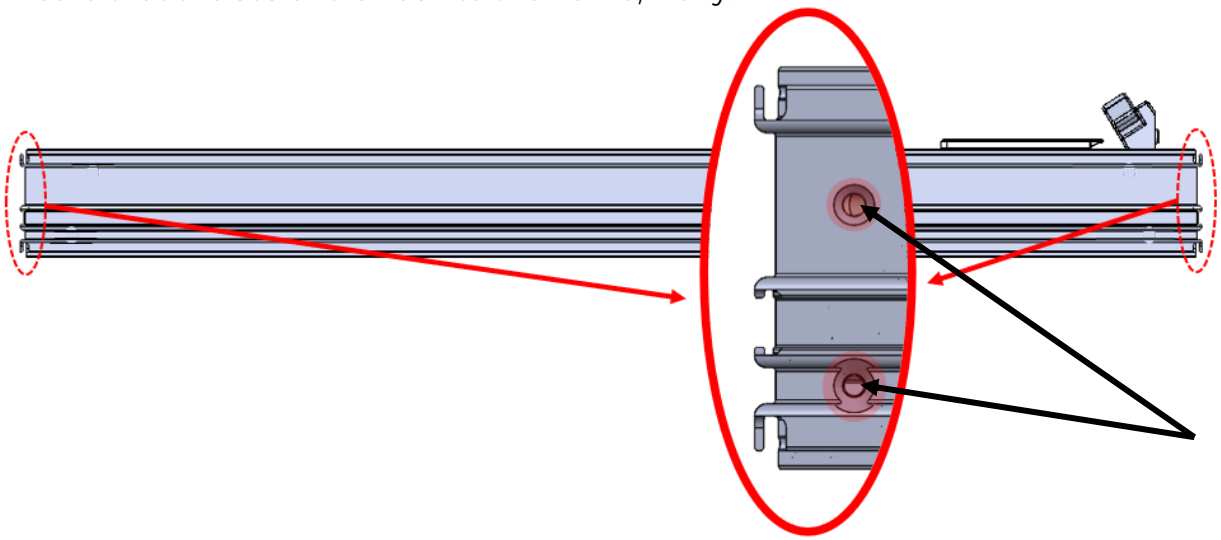

Hot melt must be flush to the frame, if any

Step 2

By pressing on it, apply tape SE4209ABL to the window, inside of the fin groove on the adjacent side of the mull. The tape should extend the entire length of the fin groove and must be continuous. The tape SE4209ABL must be flush to 1/16” shorter to the bottom of the fin groove perpendicular to the tape.

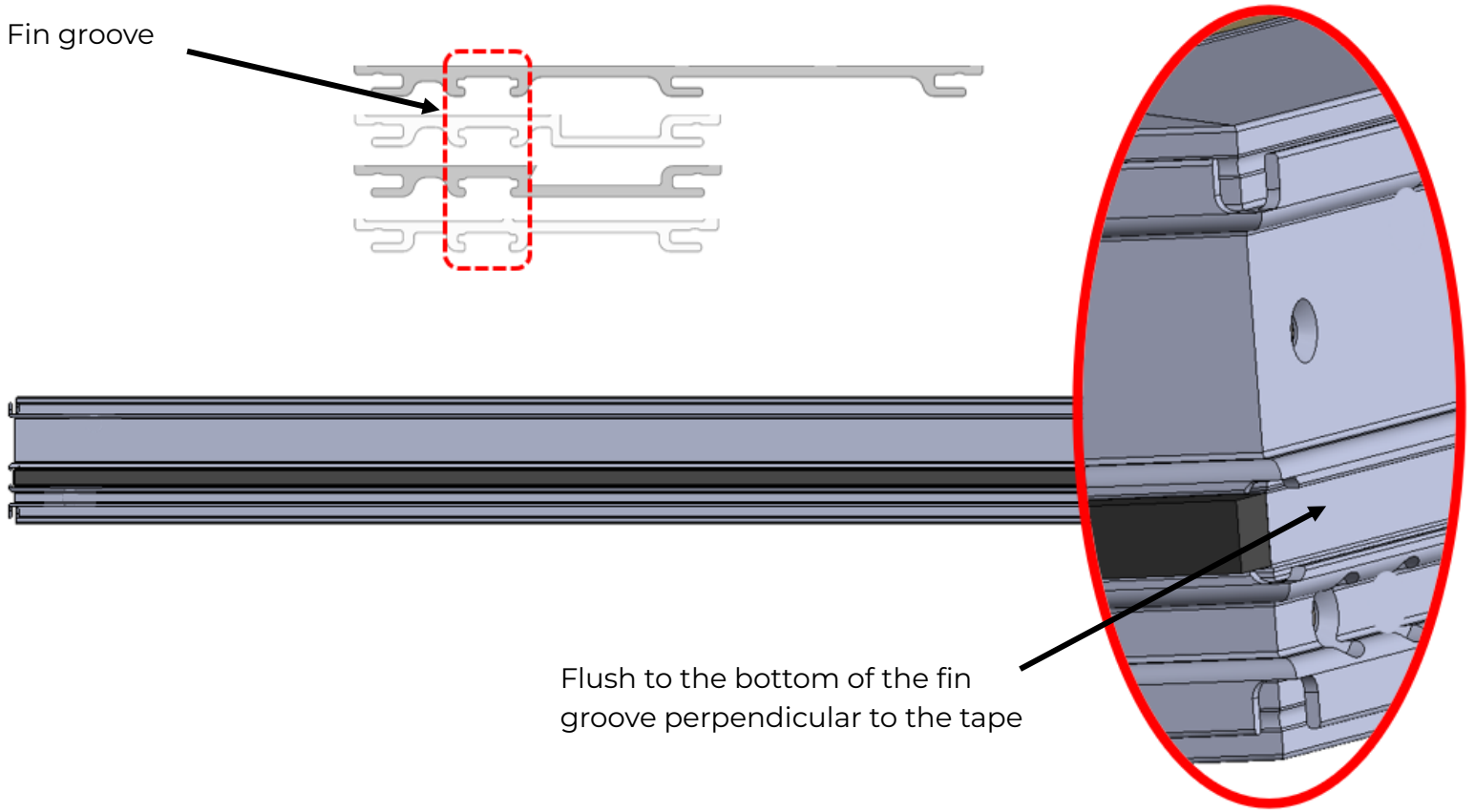

Step 3

Remove the protective liner from the tape SE4209ABL.

Remove the protective liner

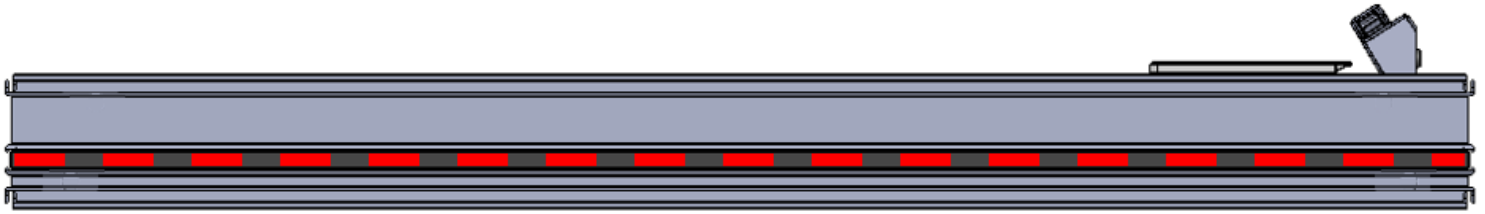

Step 4

Repeat step 1 through 3 to every unit that will be mulled.
For a triple mulled unit, the middle unit will have SE4209ABL on both sides.

Step 5

Still with the exterior facing down, align the units to have the tape SE4209ABL facing each other.

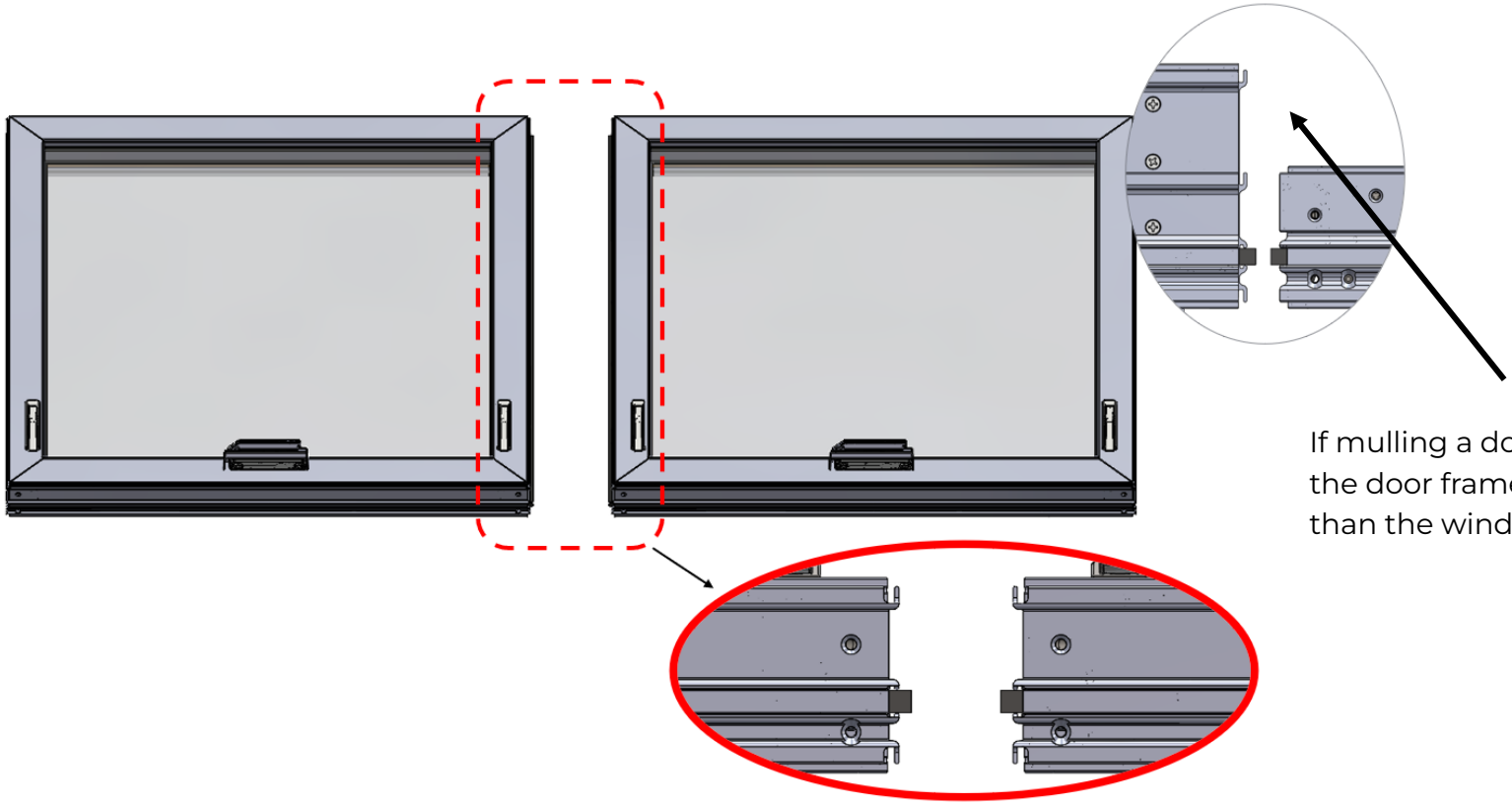

If mulling a door to a window, the door frame will be wider than the window frame

Step 5

Lift the side of the unit that needs to be mulled and insert the leg of the mull bar EX7308MI into the exterior accessory groove of the frame. The leg of the mull bar EX7308MI must be fully inserted into the accessory groove of the frame. Ensure that both ends of the side with the tape is supported.

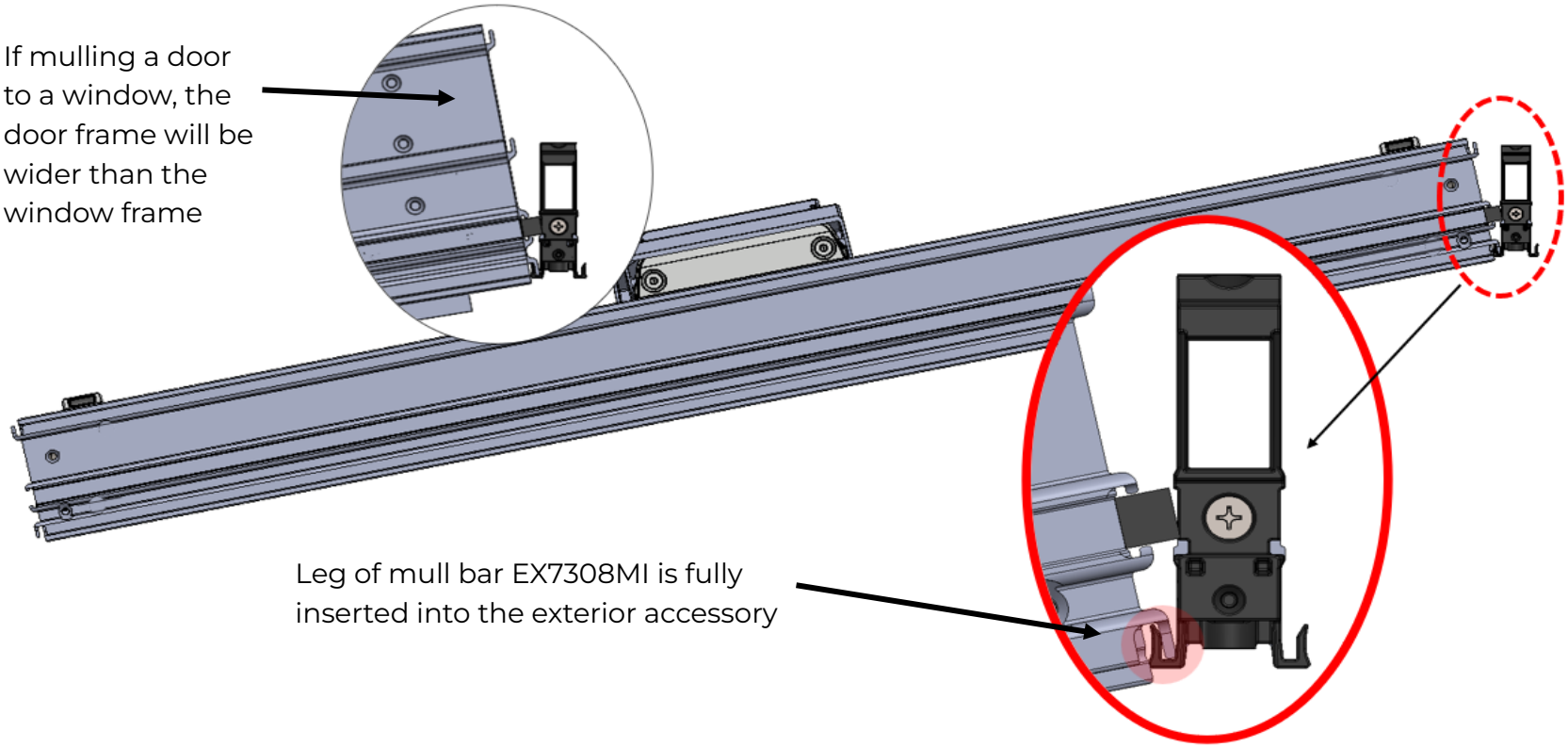

Step 6

Lift the side of the second unit that needs to be mulled and insert its accessory groove leg into the leg of the mull bar EX7308MI. The accessory groove leg of the unit must be fully inserted. Ensure that both ends of the side with the tape is supported.

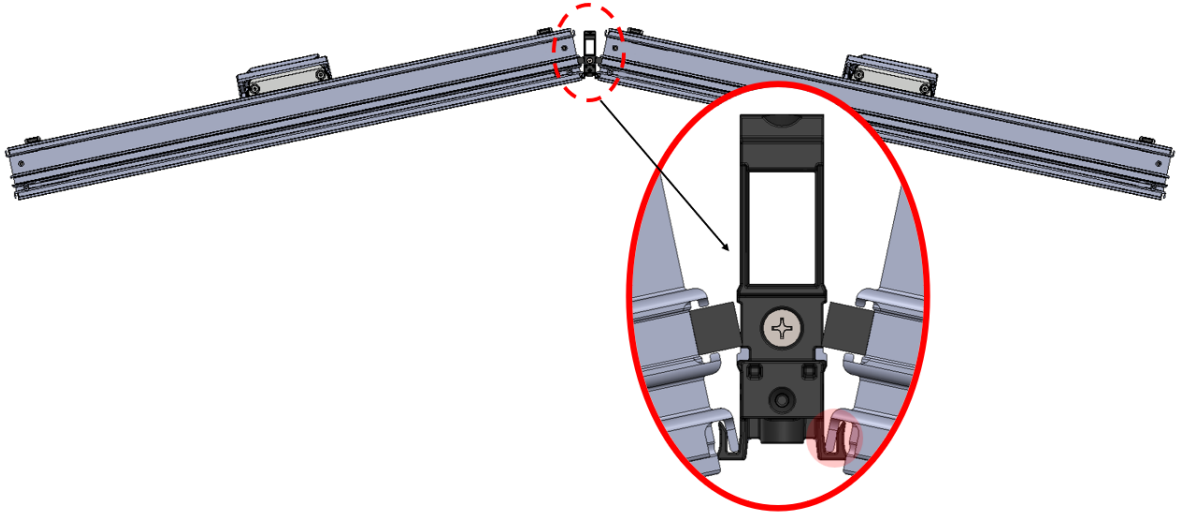

Step 7

While still having both ends of the mull joint supported, set down the assembly, making sure that the units stay engaged with the mull bar EX7308MI.

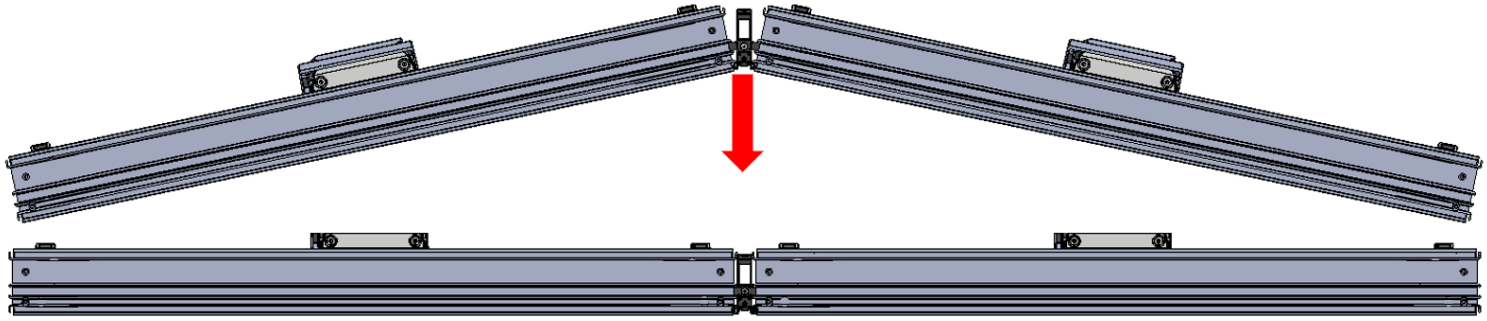

Step 8

Align the mull bar EX7308MI with the 2 units. The recess channel from the end cap IM3121BL must be flush with the groove of the units. Units should also be aligned.

The recess channel from the end cap IM3121BL must be flush with the fin groove of the units

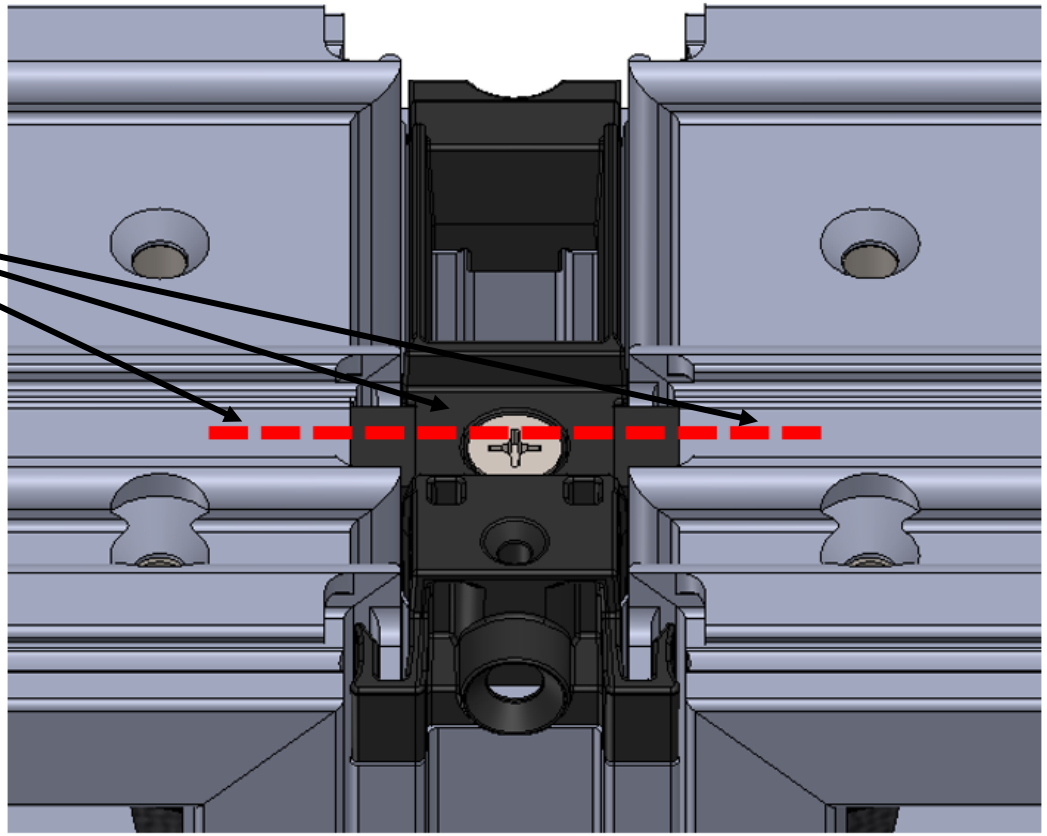

Step 9

Remove the protective liner from the tape on the pressure plate EX7309MI.

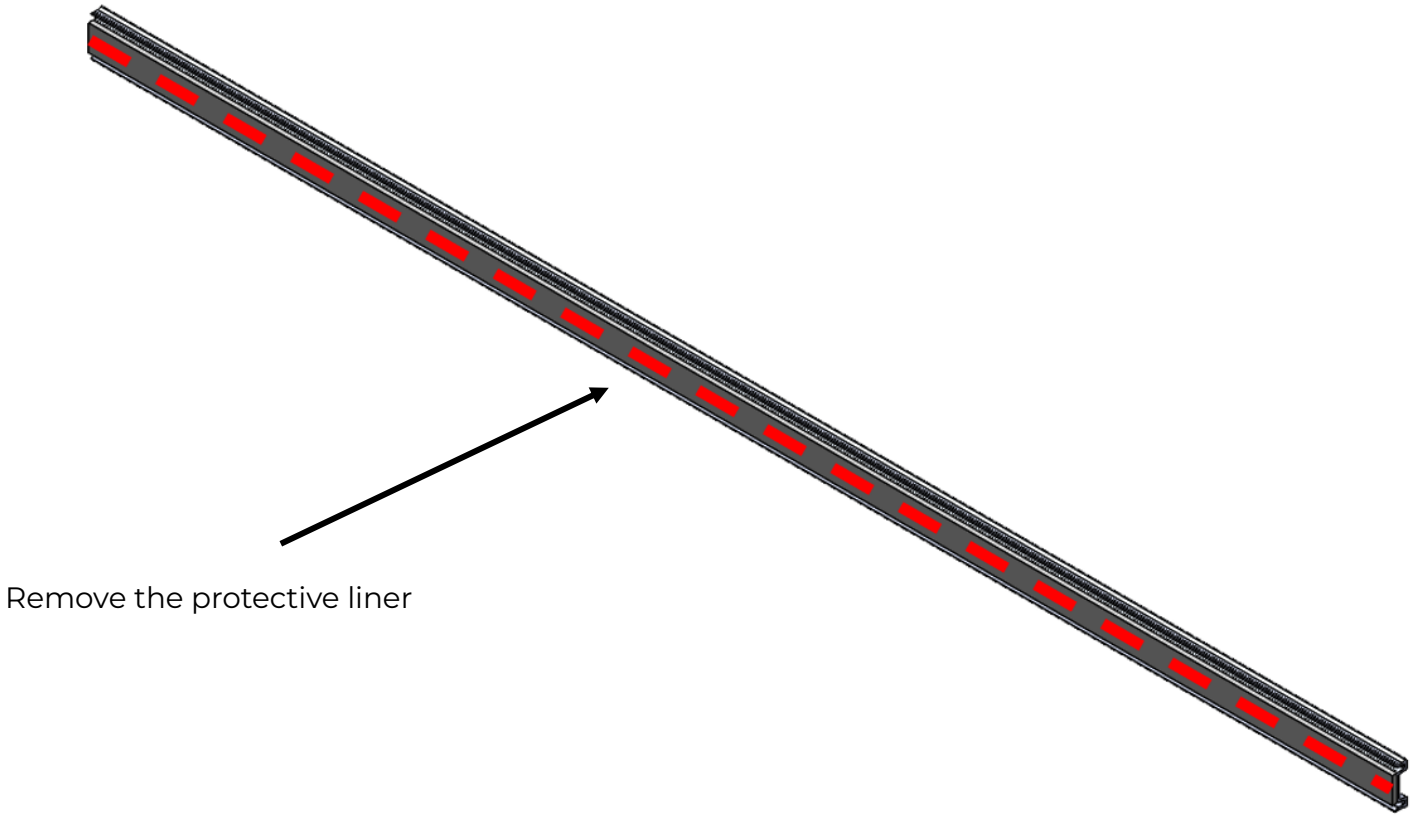

Step 10

Align the pressure plate (EX7309MI) between the 2 end caps (IM3121BL).
The pressure plate must not sit on the end cap (IM3121BL).

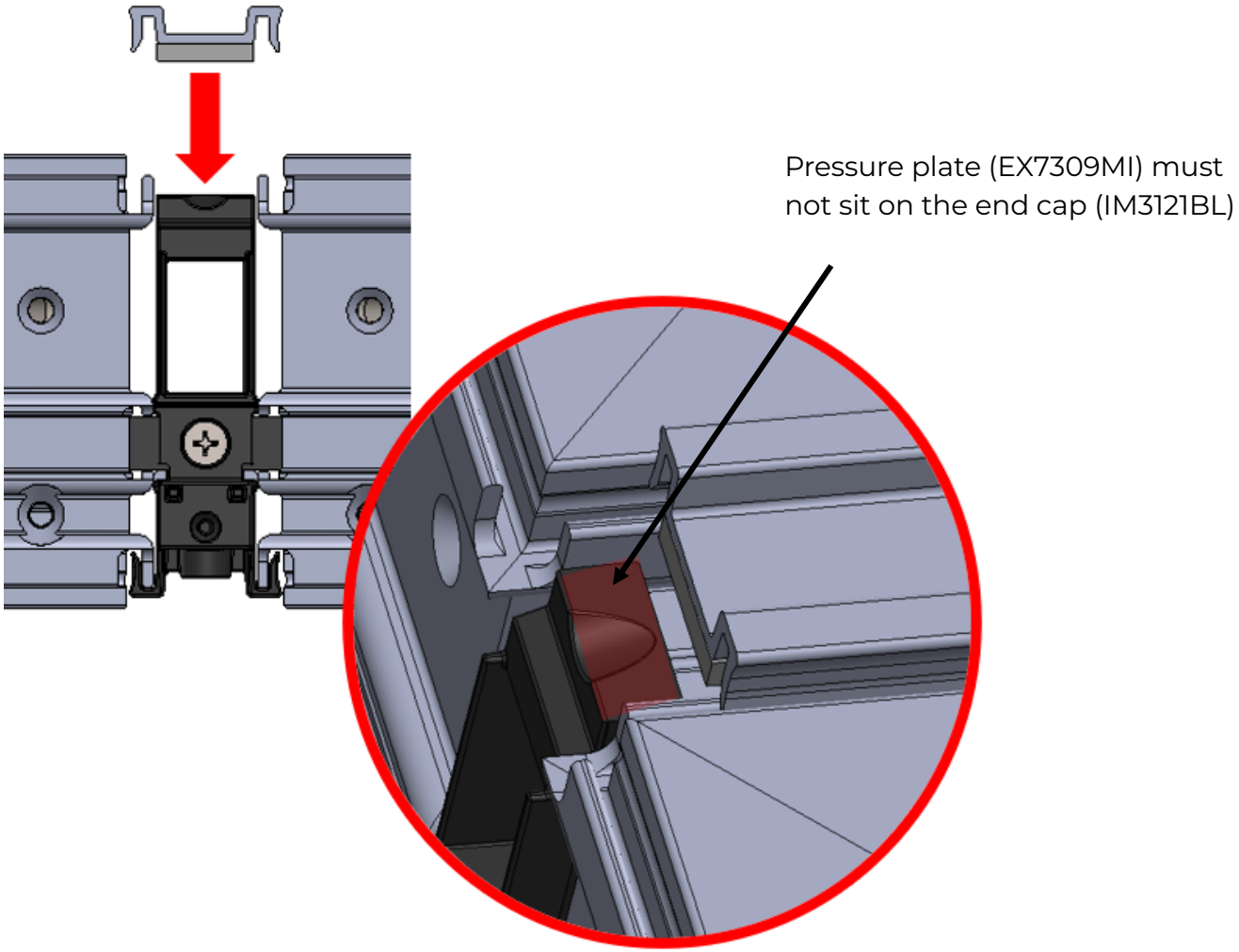

Step 11

While squeezing the two (2) units together, fully insert the pressure plate EX7309MI legs into the accessory groove of the units. If needed, use a rubber mallet to gently insert the pressure plate EX7309MI. The gap between the end cap (IM3121BL) and the pressure plate (EX7309MI) should be approximately equal on both sides of the pressure plate EX7309MI.

The legs of the pressure plate EX7309MI should be fully inserted

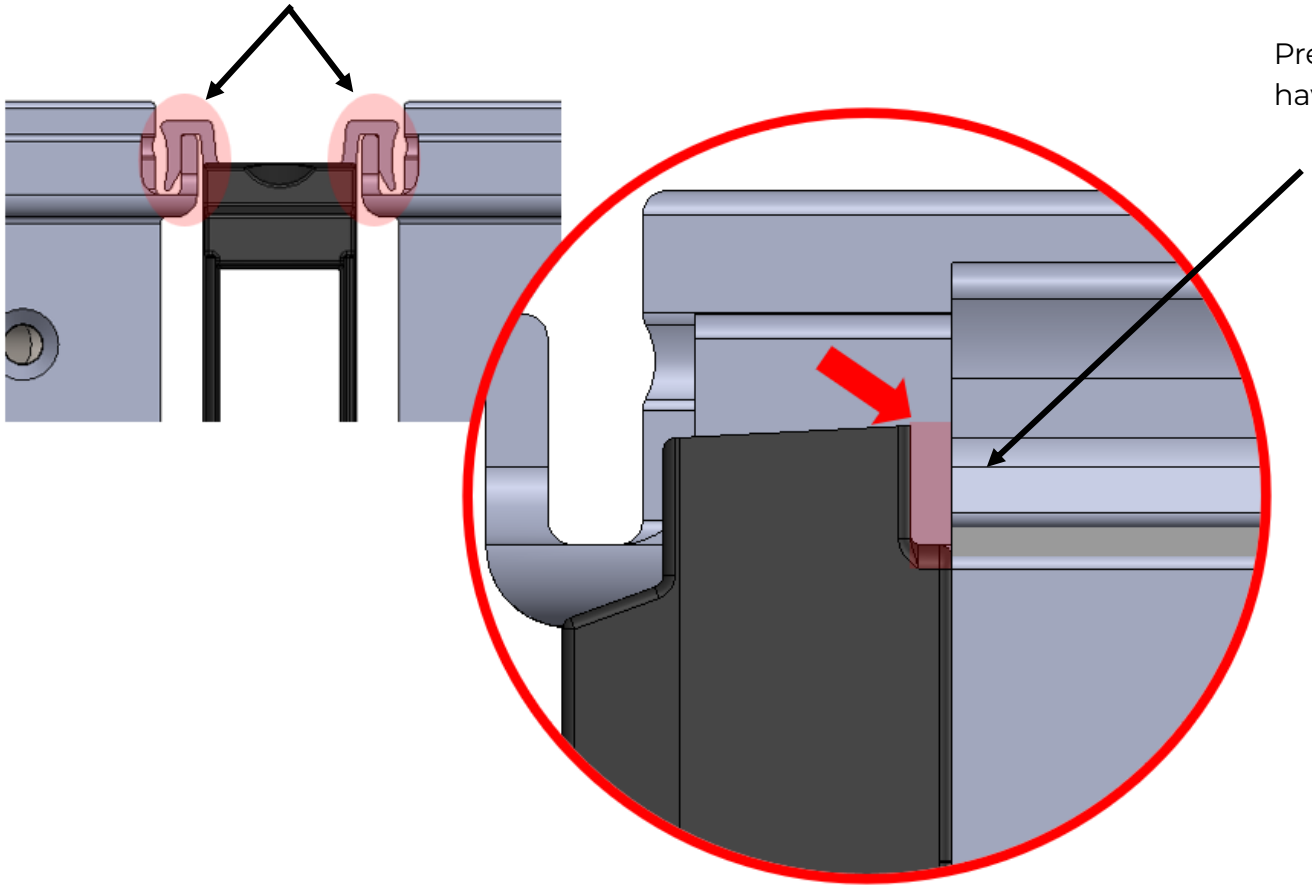

Pressure plate EX7309MI should have a gap on both sides

Step 12

Install fastener FA8209SS in every pre-drilled hole of the pressure plate EX7309MI. The fastener is fully inserted when the bottom of the fastener head is seating on the pressure plate and both mull bars EX7308MI and EX7309MI are fully seating on the accessory grove legs of the units. No debris should be under the head of the screw. Do not overdrive or distort the pressure plate with the fasteners.

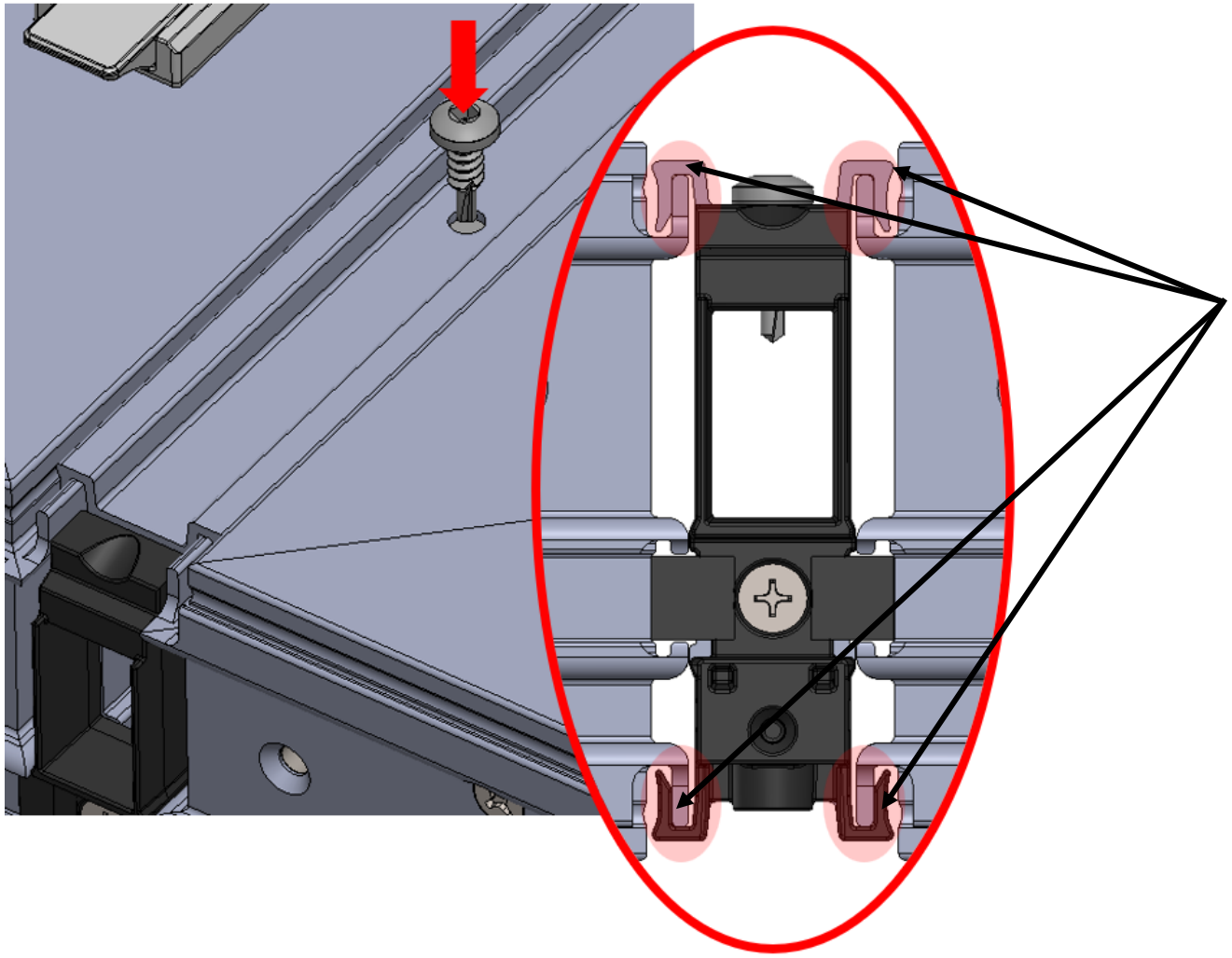

Both mull bars (EX7308MI & EX7309MI) legs are fully seating on the accessory groove legs of the units

Step 13

Repeat step 5 through 12 for every additional mull bar, if applicable

ATTENTION

If mulling windows together, go to steps 14A and 15A follow by step 16
If mulling a window to a door, go to steps 14B and 15B follow by step 17

Step 14A

Window mulled to window

Remove the backing on both foam tapes that the interior trim cover PX5028XX has.

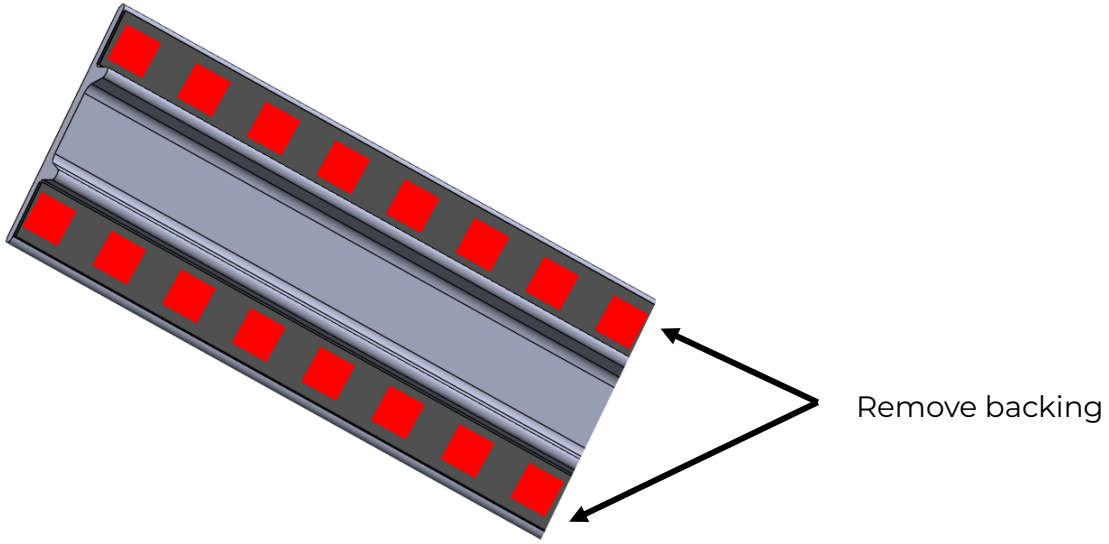

Step 15A

Window mulled to window

Center the interior trim cover PX5028XX with the units, on the pressure plate EX7309MI. The trim cover PX5028XX will not pass the accessory groove of the units on both sides. Apply the interior trim cover PX5028XX by pressing it onto the pressure plate EX7309MI.

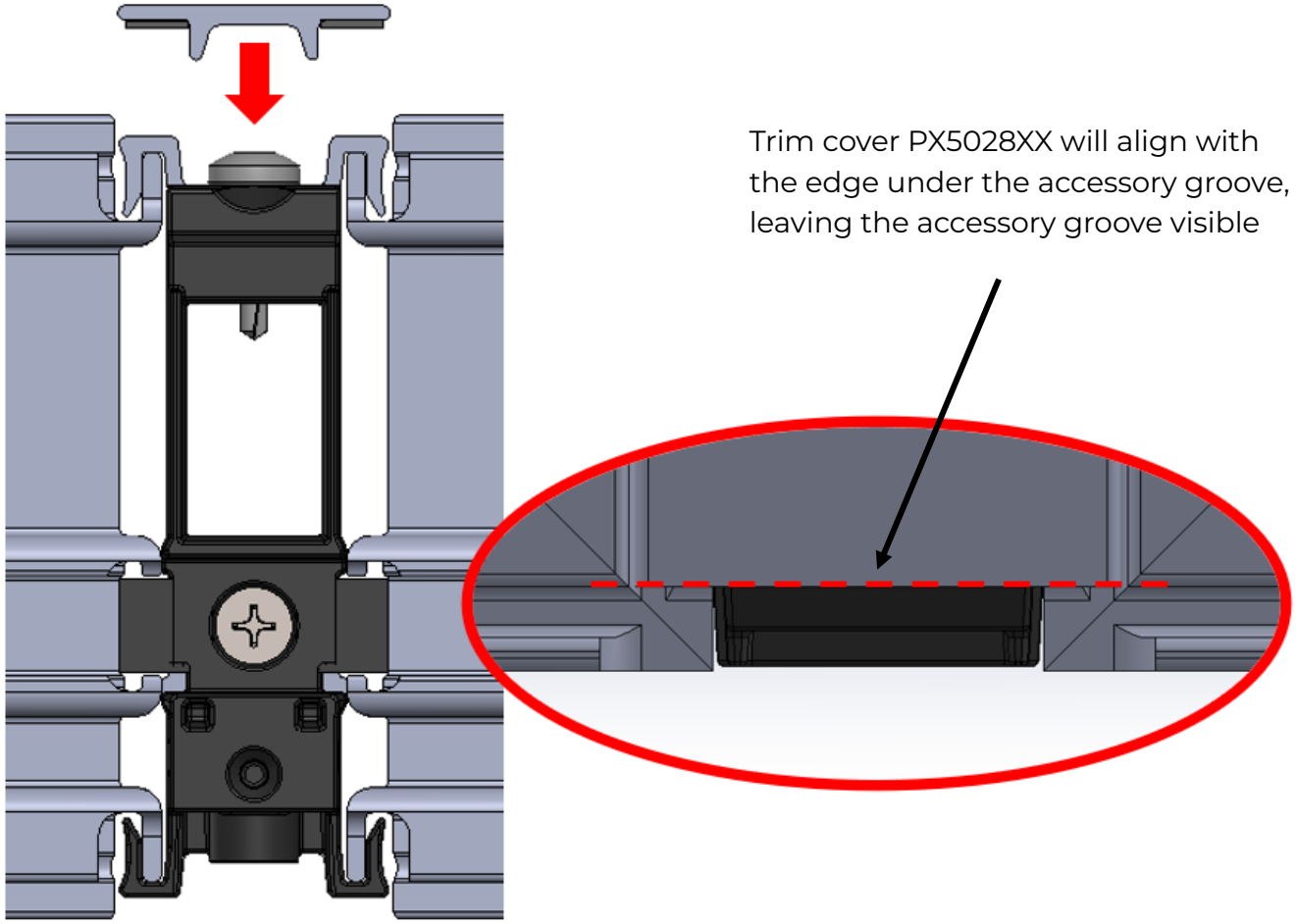

Step 15B

Door mulled to window

Center the interior trim cover EX7310XX with the units, on the pressure plate EX7309MI. The trim cover EX7310XX will not pass the accessory groove of the units. With a rubber mallet, apply the interior trim cover EX7310XX onto the pressure plate EX7309MI.

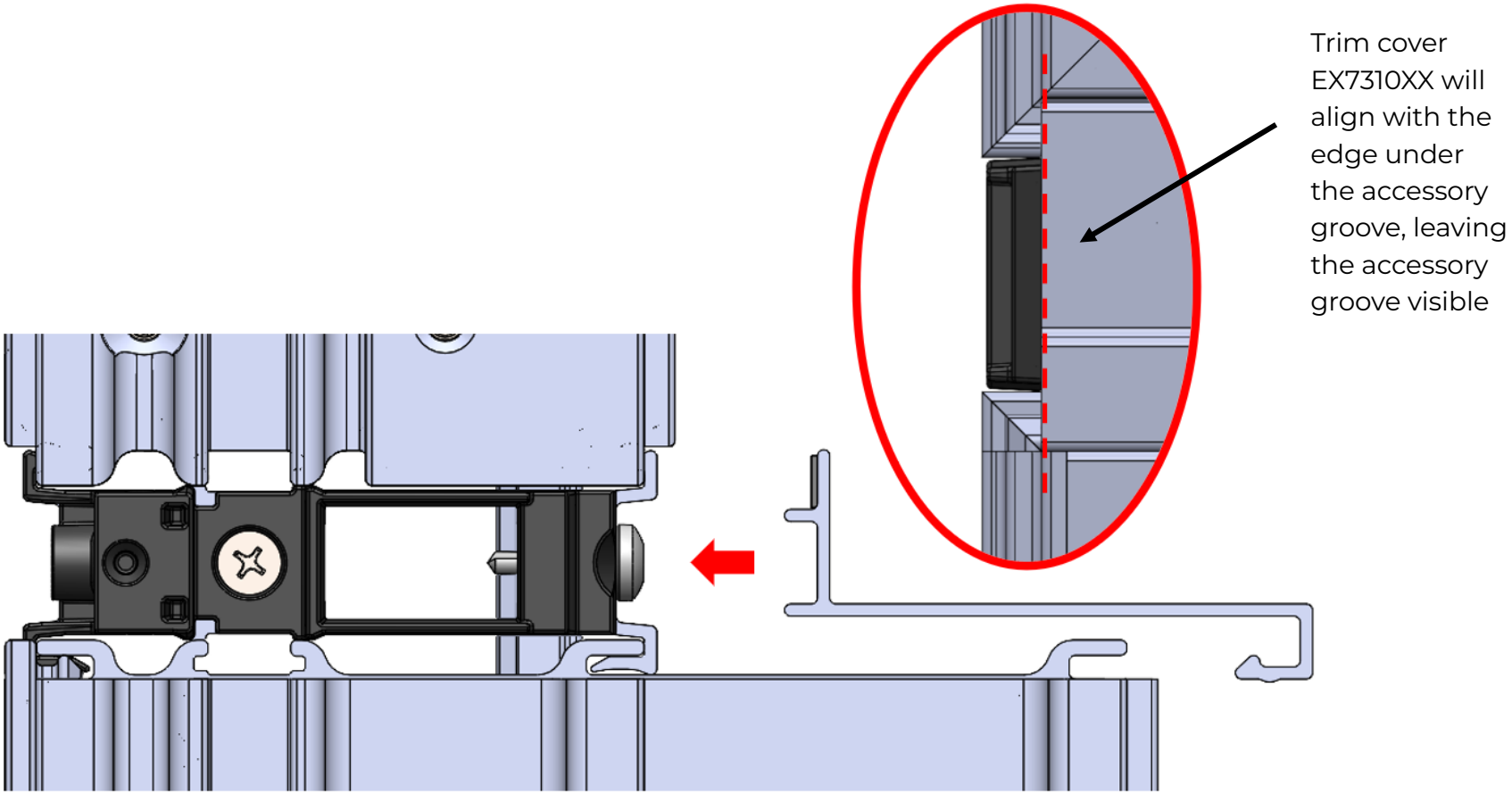

Step 16

Repeat step 14A and 15A for every additional mull bar, if applicable.

Step 17

While supporting the mull, turn over the mulled unit, interior facing down. The unit should be flipped over in a direction that is perpendicular to the joint of the mull as shown below.

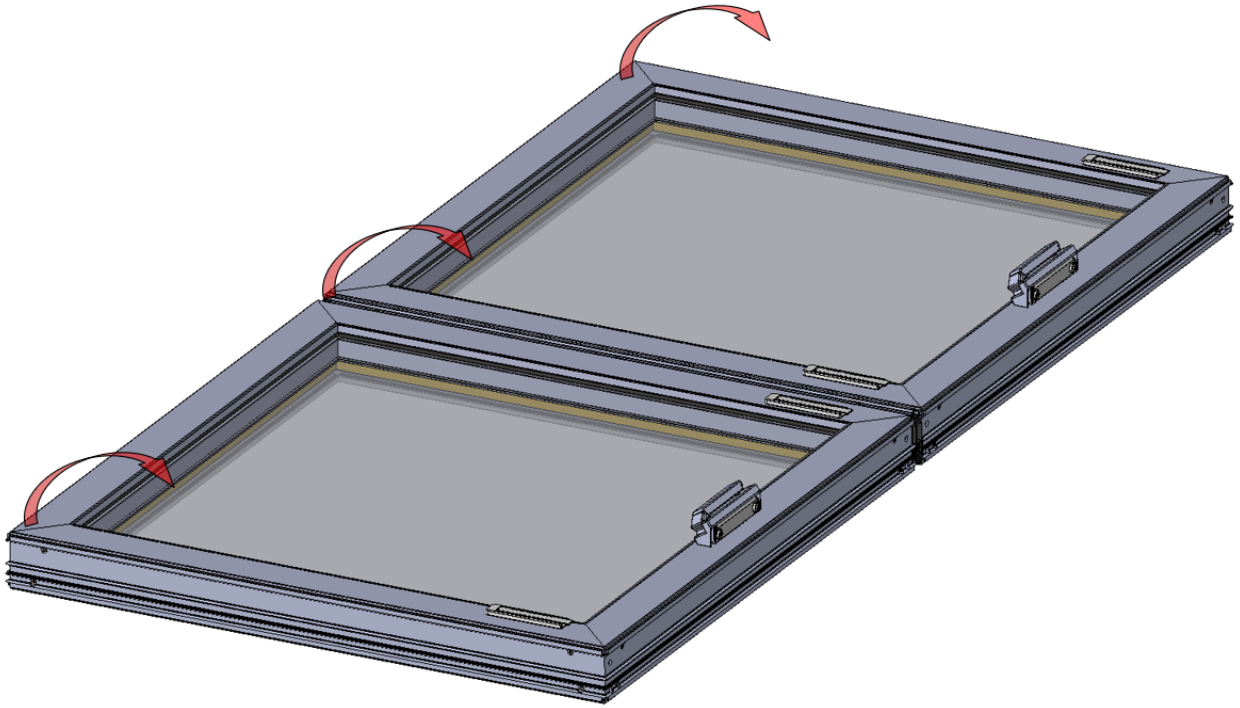

Step 18

With the supplied Pecora sealant SE0034CL, apply 3/16” bead of sealant at the edges of the frames shown below, at the mull joint, where the sealing cap IM3122XX will be placed, approximately 1 inch from the center of the end cap IM3121BL.

Area where the supplied Pecora sealant must be applied

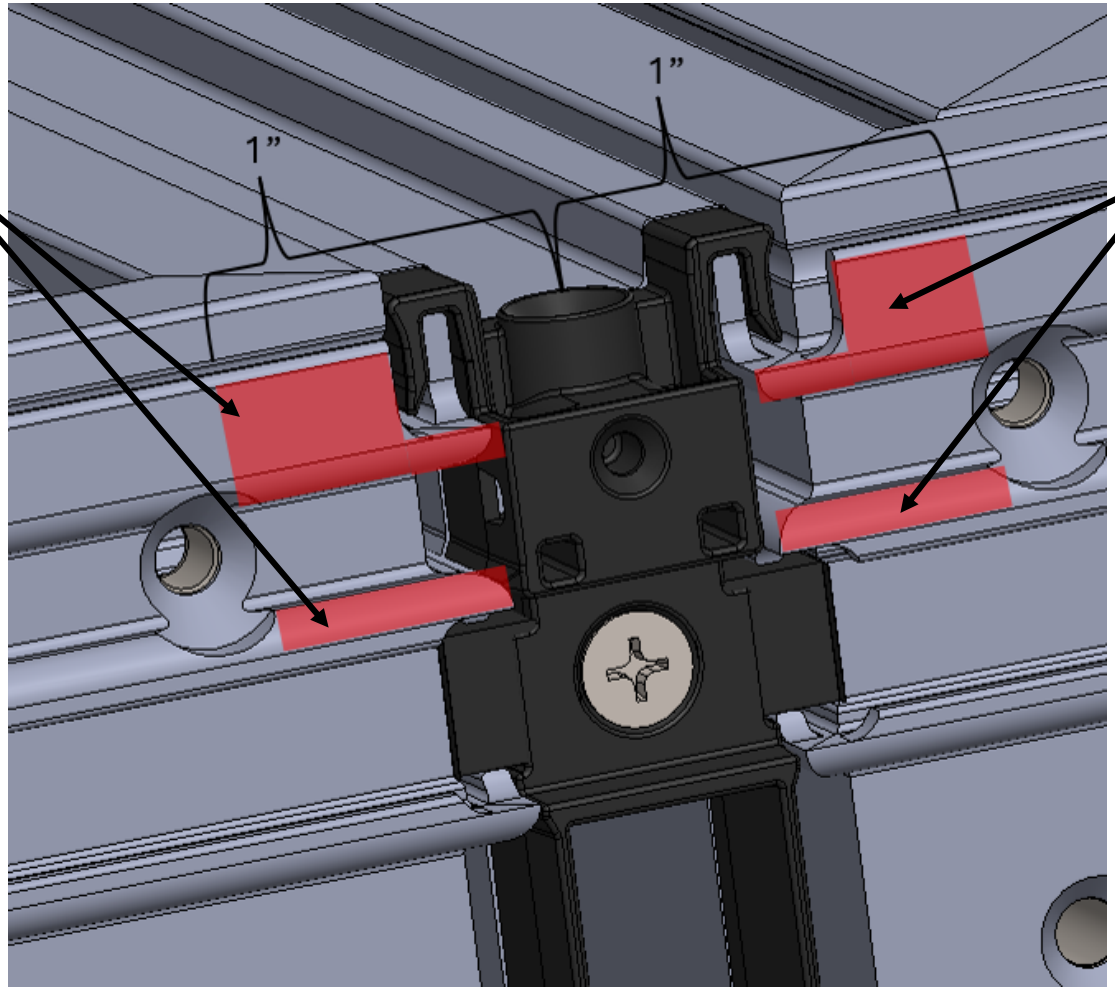

Area where the supplied Pecora sealant must be applied

Step 19

Insert the sealing cap IM3122XX into the end cap IM3121BL.

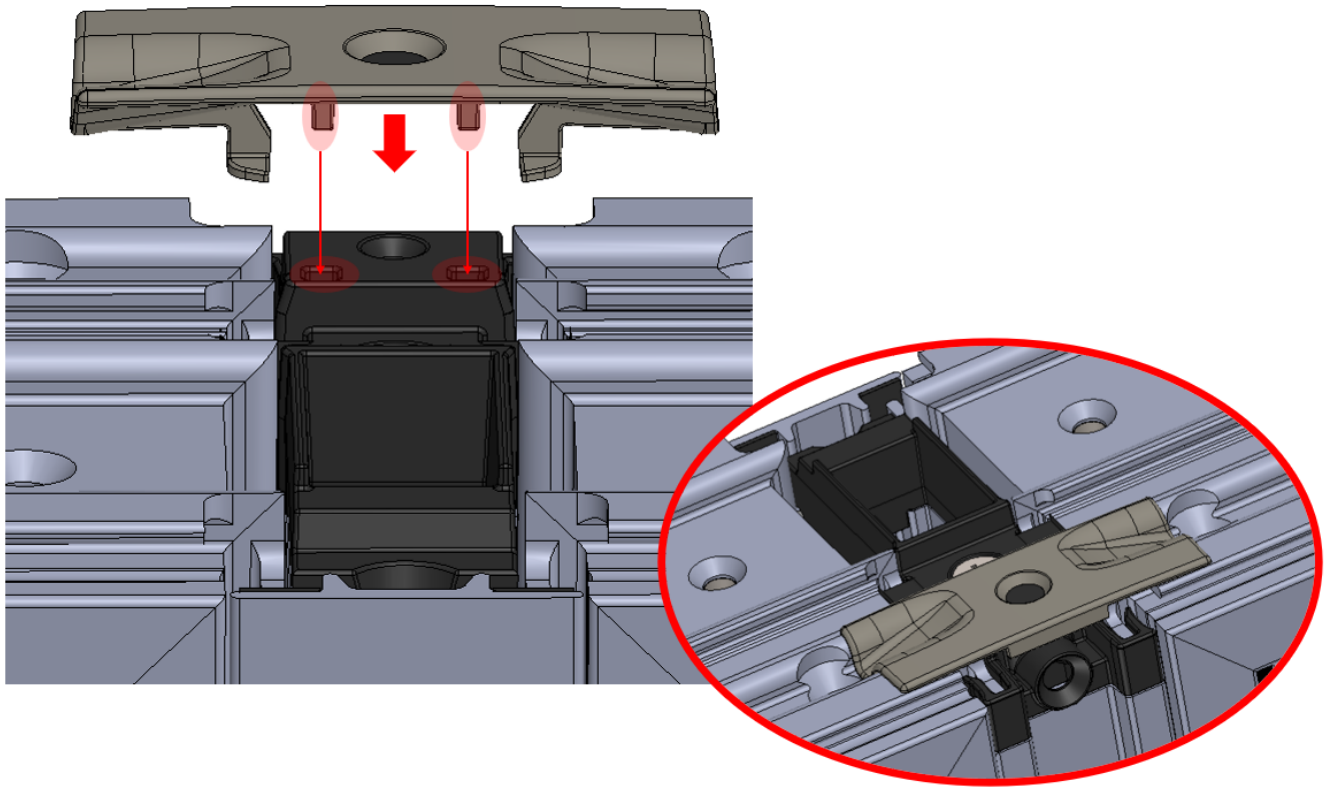

Step 20

Install fastener FA0315XX in the hole of the sealing cap IM3122XX, until the fastener is flush to the sealing cover IM3122XX.

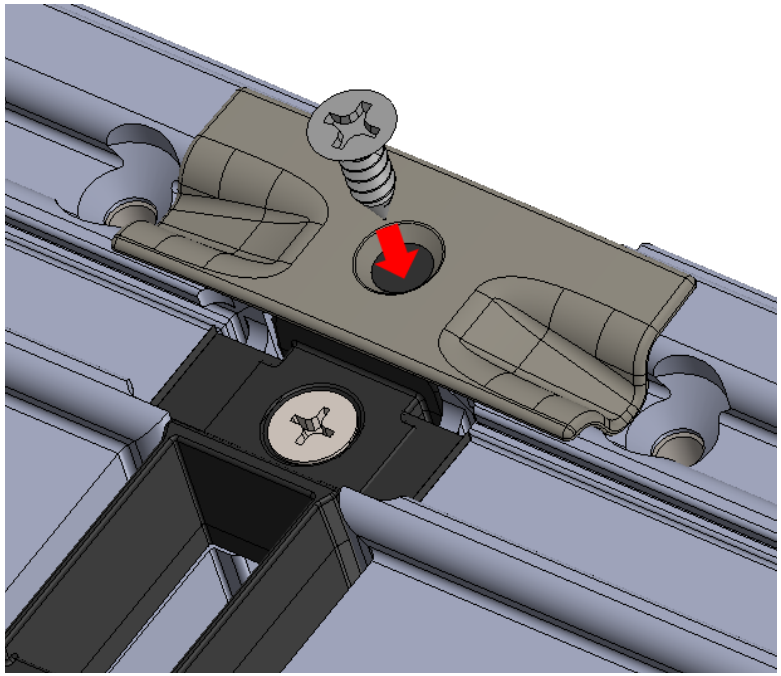

Step 21

Repeat step 18 through 20 for every mull joint

ATTENTION

If final product has mounting fin, go to step 22A
If final product has no mounting fin (block frame), go to step 22B

Step 22A

Mounting fin

With the supplied Pecora sealant SE0034CL, fill with sealant the top of the end cap and inside the fin groove on both units. The sealant must start at least 4 inches from the center of the end cap IM3121BL and must be continuous from one unit to the other unit.

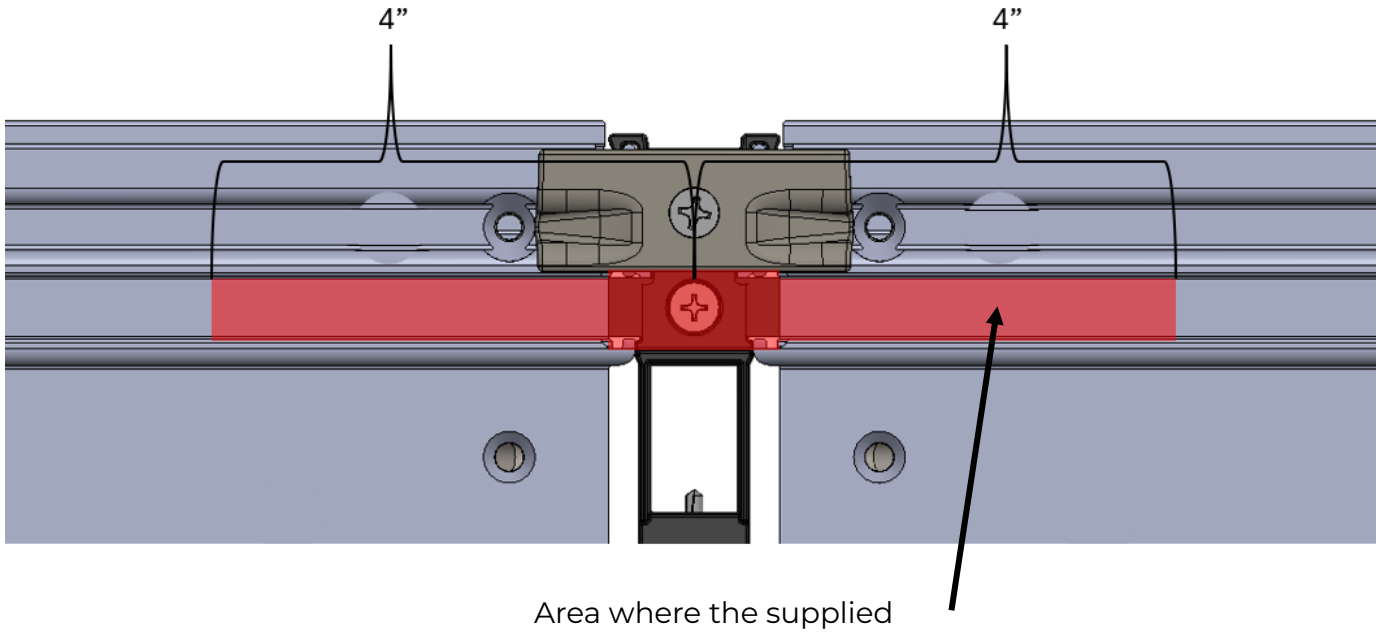

Step 22B

Block frame

With the supplied Pecora sealant SE0034CL, fill with sealant the top of the end cap and inside the fin groove on both units. The sealant must start at least 4 inches from the center of the end cap IM3121BL and must be continuous from one unit to the other unit. With the help of a spreader or spatula, smooth the sealant to be flush to the edge of the frame.

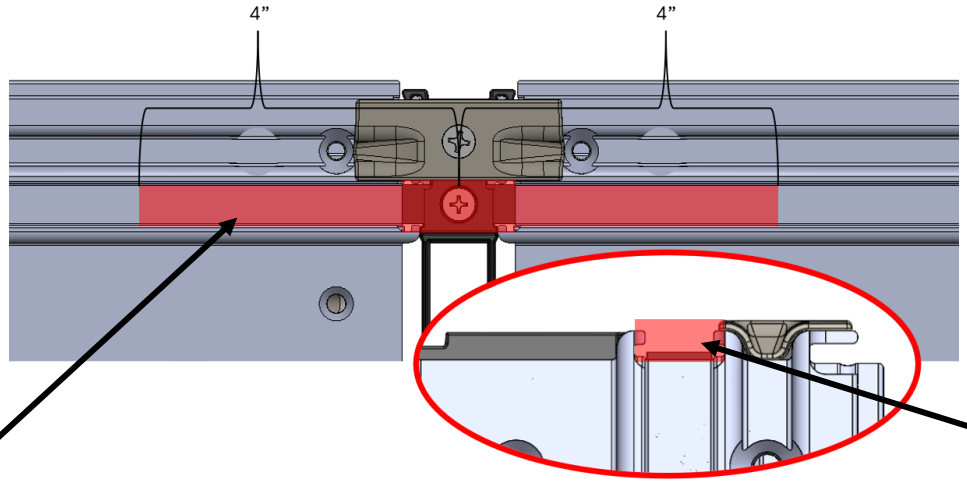

Area where the supplied Pecora sealant must be applied continuously

Smooth the sealant to be flush to the edge of the frame

Step 23

Repeat step 22 for every mull joint

ATTENTION

If final product has no mounting fin (block frame), skip step 24 through step 28, and go to step 29

Step 24

Starting on one of the sides where sealant was applied, insert the fin VA5084 into the fin groove. The fin VA5084 should run through the mull joint. Move the fin past the frame until the other extremity is fully inset from the frame. Wipe the excess of sealant that follows the fin after the insertion.

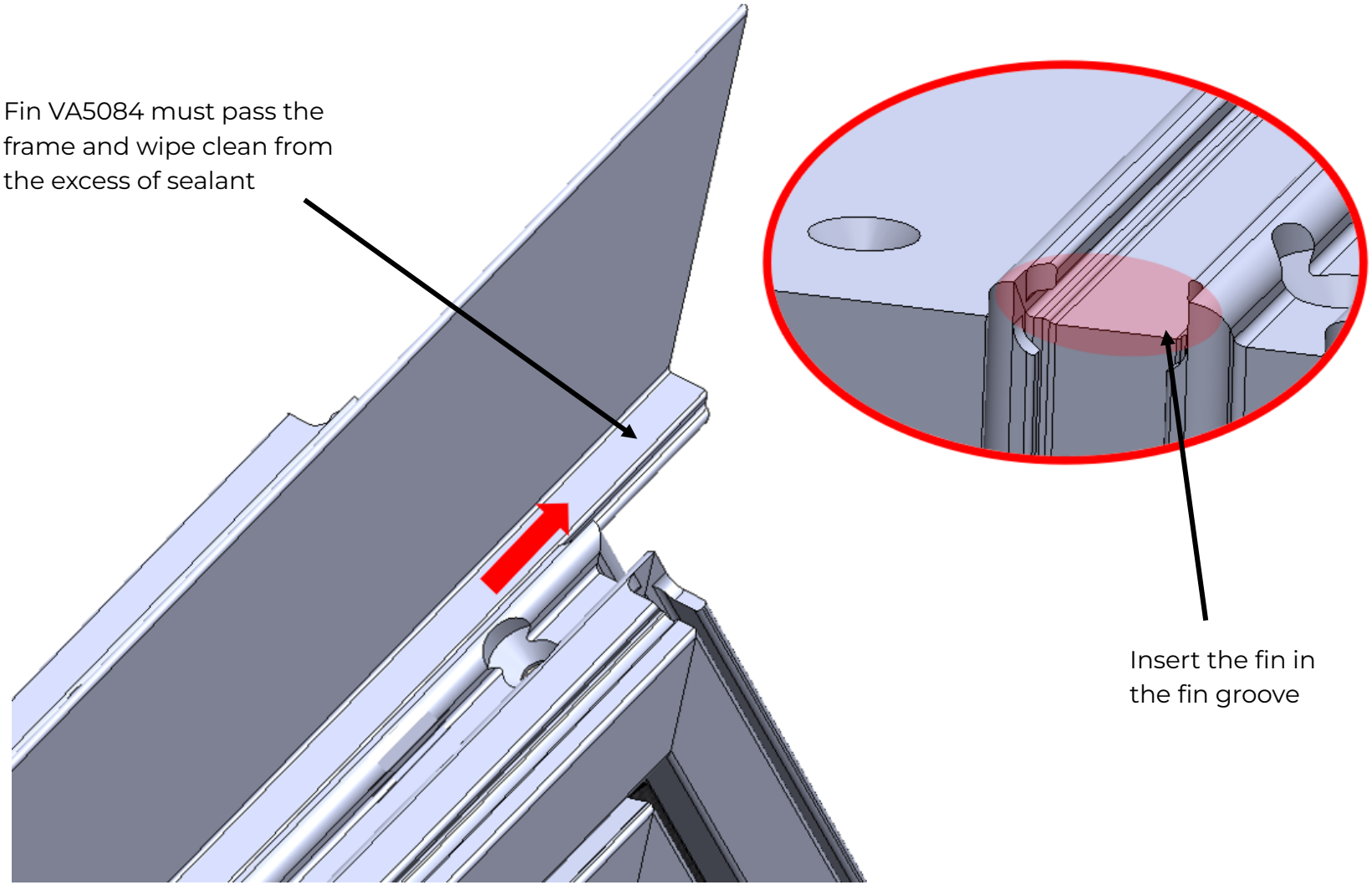

Step 25

On the side where the fin is inset from the frame, insert the next piece of fin VA5084 into the fin groove and stop when the fin is still fully inset from the frame.

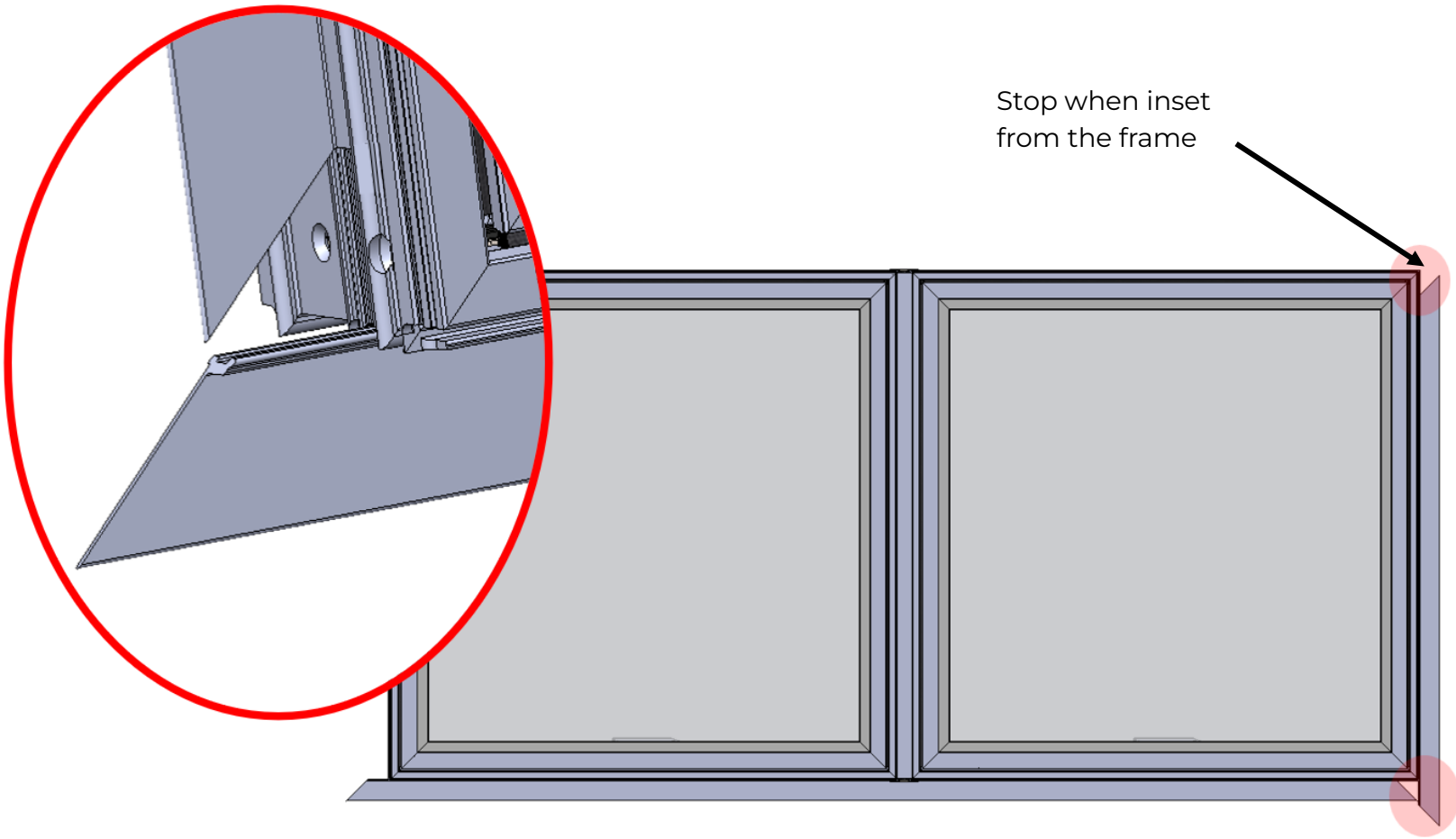

Step 26

Repeat step 25 to complete all sides. On the side of the mull joint, wipe clean the excess of sealant after inserting the fin VA5084.

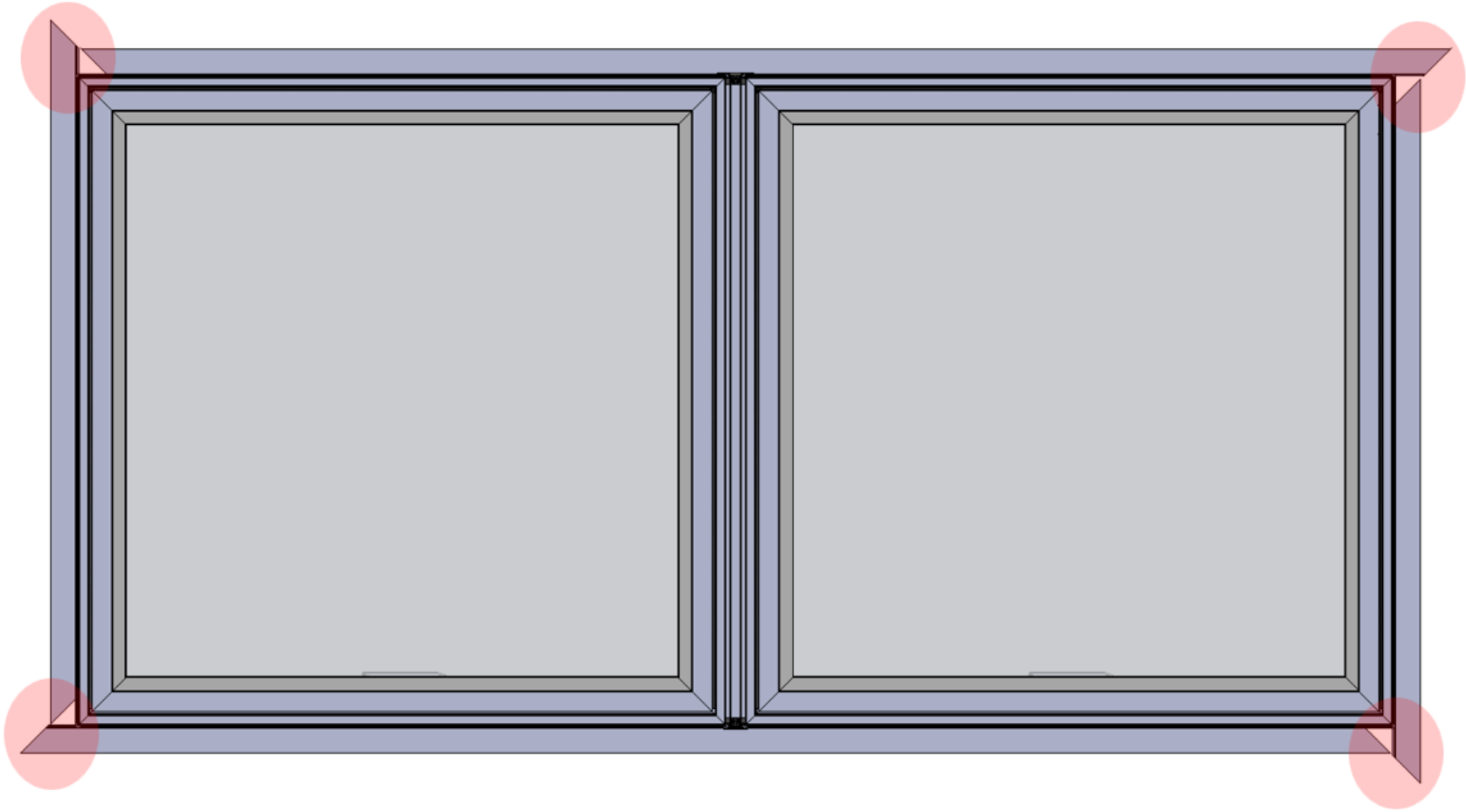

Step 27

Move the fins VA5084 until the miters align.

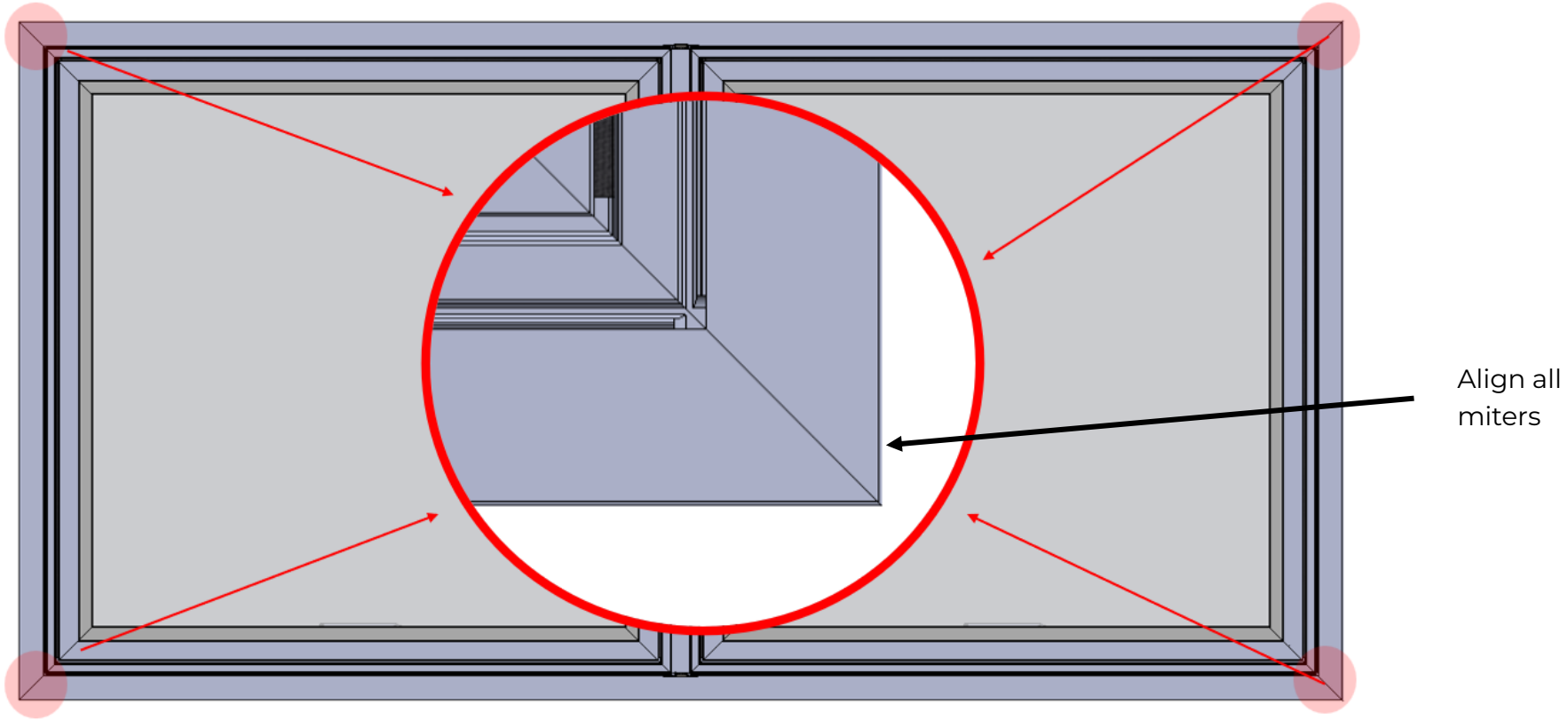

Step 28

Apply the corner labels LA0220MM at the fin corners. The corner labels LA0220MM must cover the entire exterior of the fin miter. The fold of the corner labels LA0220MM must be on the interior side of the fin.

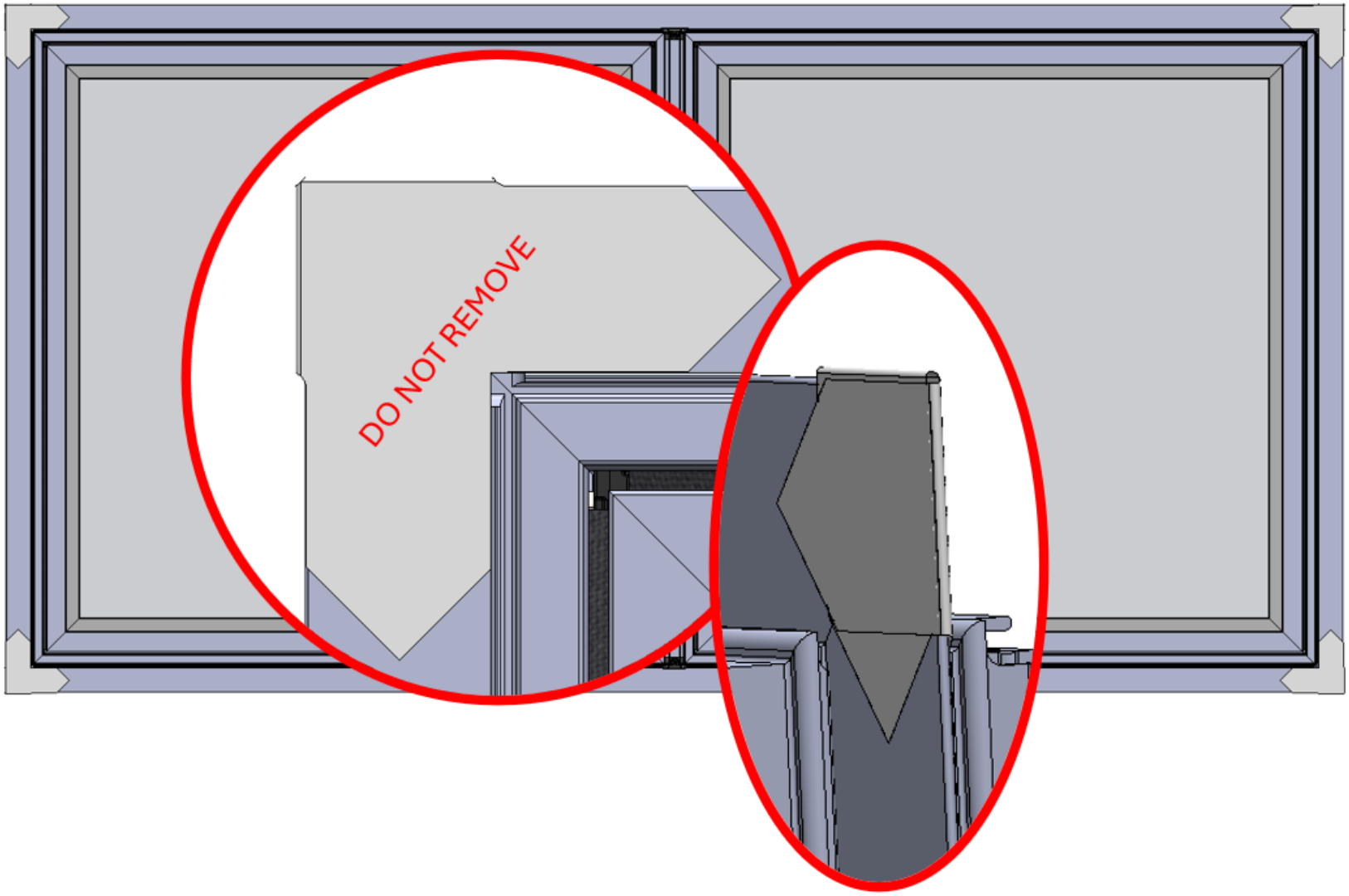

Step 29

Using a rubber mallet, install the requested exterior accessories (EX7302XX or EX7303XX) into the accessory grooves on all sides.

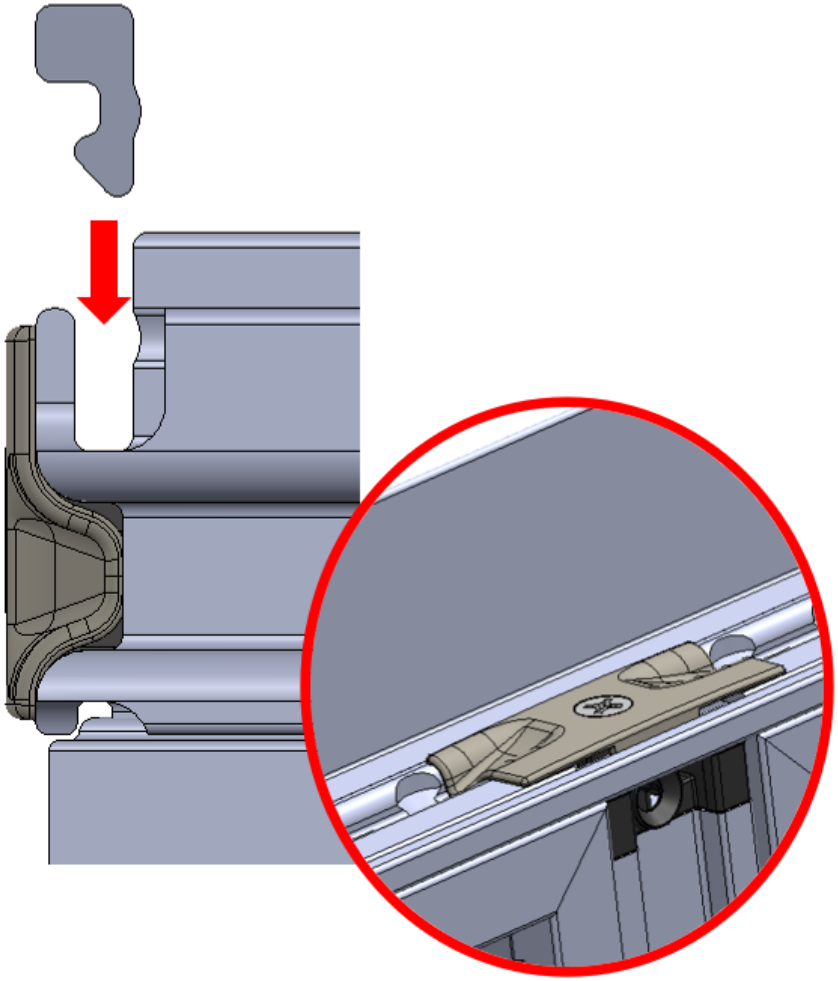

Step 30A

Mounting fin

Using the Pecora sealant SE0034CL, inject the sealant through the injection port of the end cap IM3121BL until sealant fully seals the end cap IM3121BL. The end cap IM3121BL has enough sealant when sealant can be seen on two top areas of the sealing cap IM3122XX.

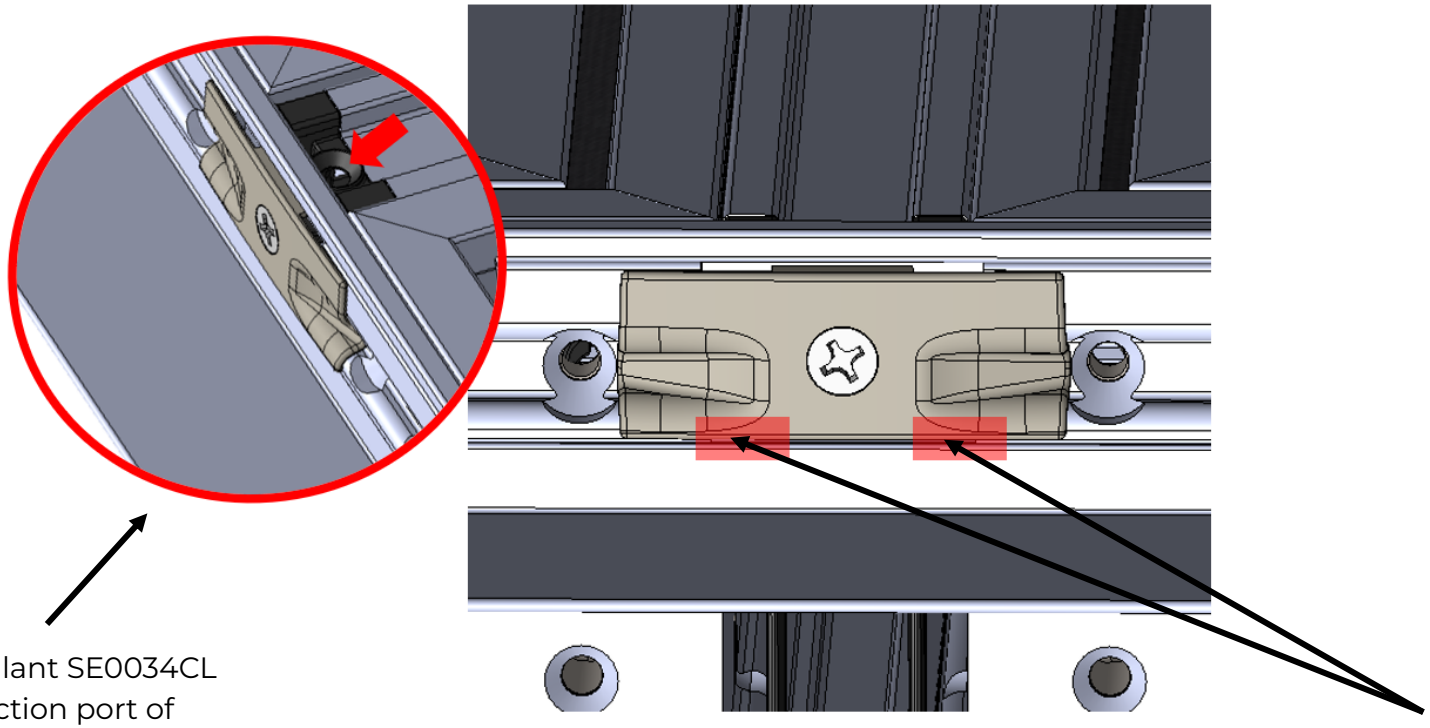

Inject Pecora sealant SE0034CL through the injection port of the end cap IM3121BL

Visual confirmation when end cap IM3121BL has enough sealant

Step 30B

Block frame

Using the Pecora sealant SE0034CL, inject the sealant through the injection port of the end cap IM3121BL until sealant fully seals the end cap IM3121BL. The end cap IM3121BL has enough sealant when sealant can be seen on two top areas of the sealing cap IM3122XX. With the help of a spreader or spatula, smooth the sealant to be flush to the edge of the frame.

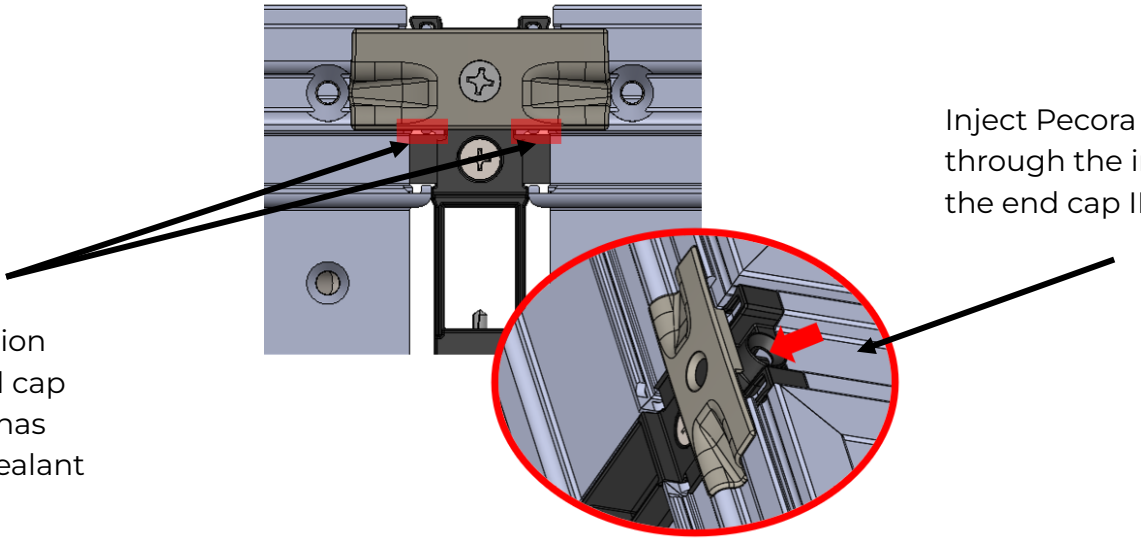

Step 31

Repeat step 30 for every mull joint

ATTENTION

If final product has no mounting fin (block frame), skip step 32, and go to step 33

Step 32

Using the Pecora sealant SE0034CL, apply a continuous 3/16” diameter bead of sealant around the exterior perimeter of the fin/frame joint and on the interior side at the edge of the fin miter. The interior bead of sealant should be 1-1/2 inch long. Smooth the exterior perimeter bead of sealant.

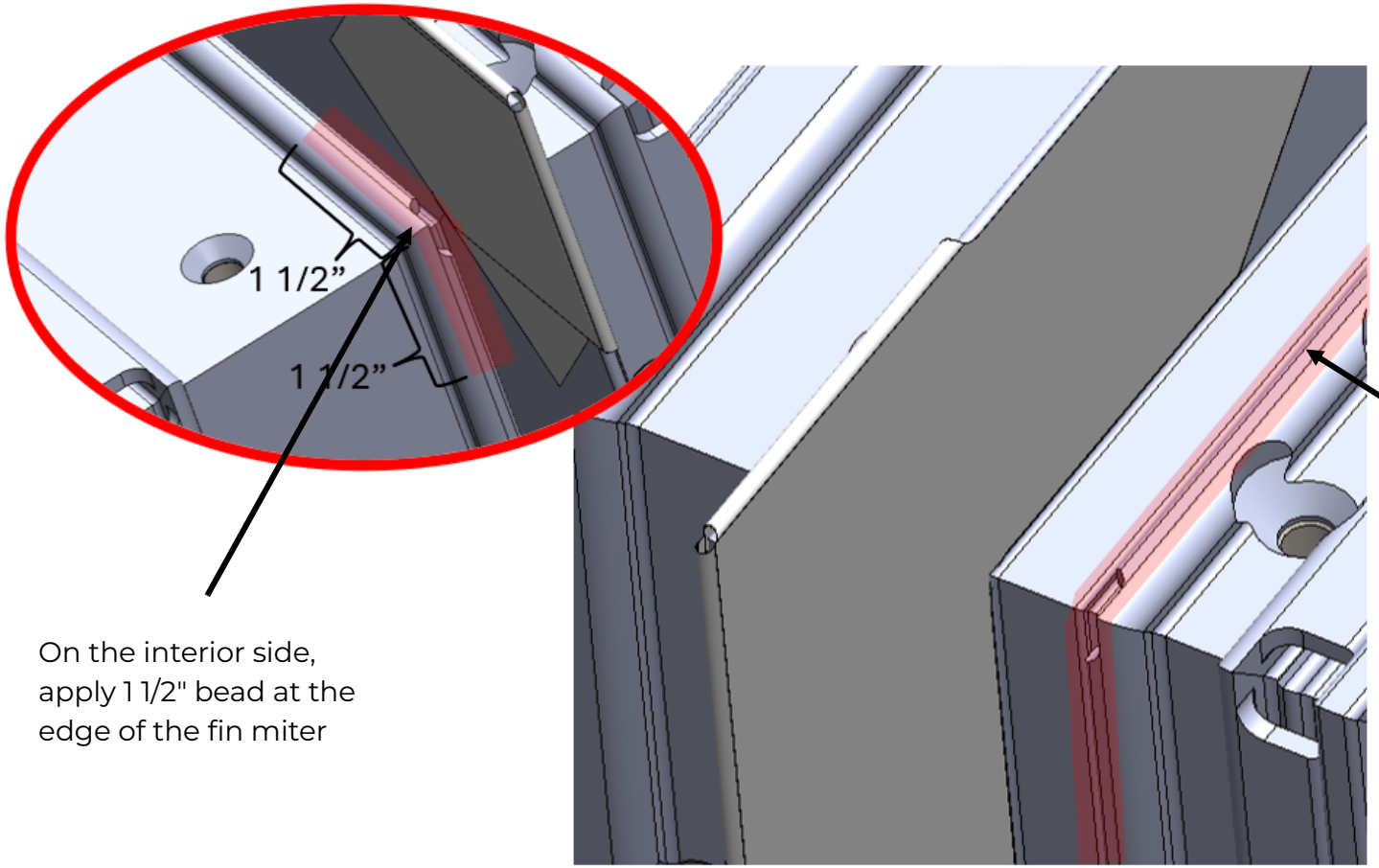

On the interior side, apply 1 1/2" bead at the edge of the fin miter

Around the full perimeter of the fin/frame joint

Step 33

Using the Pecora sealant SE0034CL, apply a continuous 3/16” diameter bead of sealant around the exterior perimeter of the fin/frame.

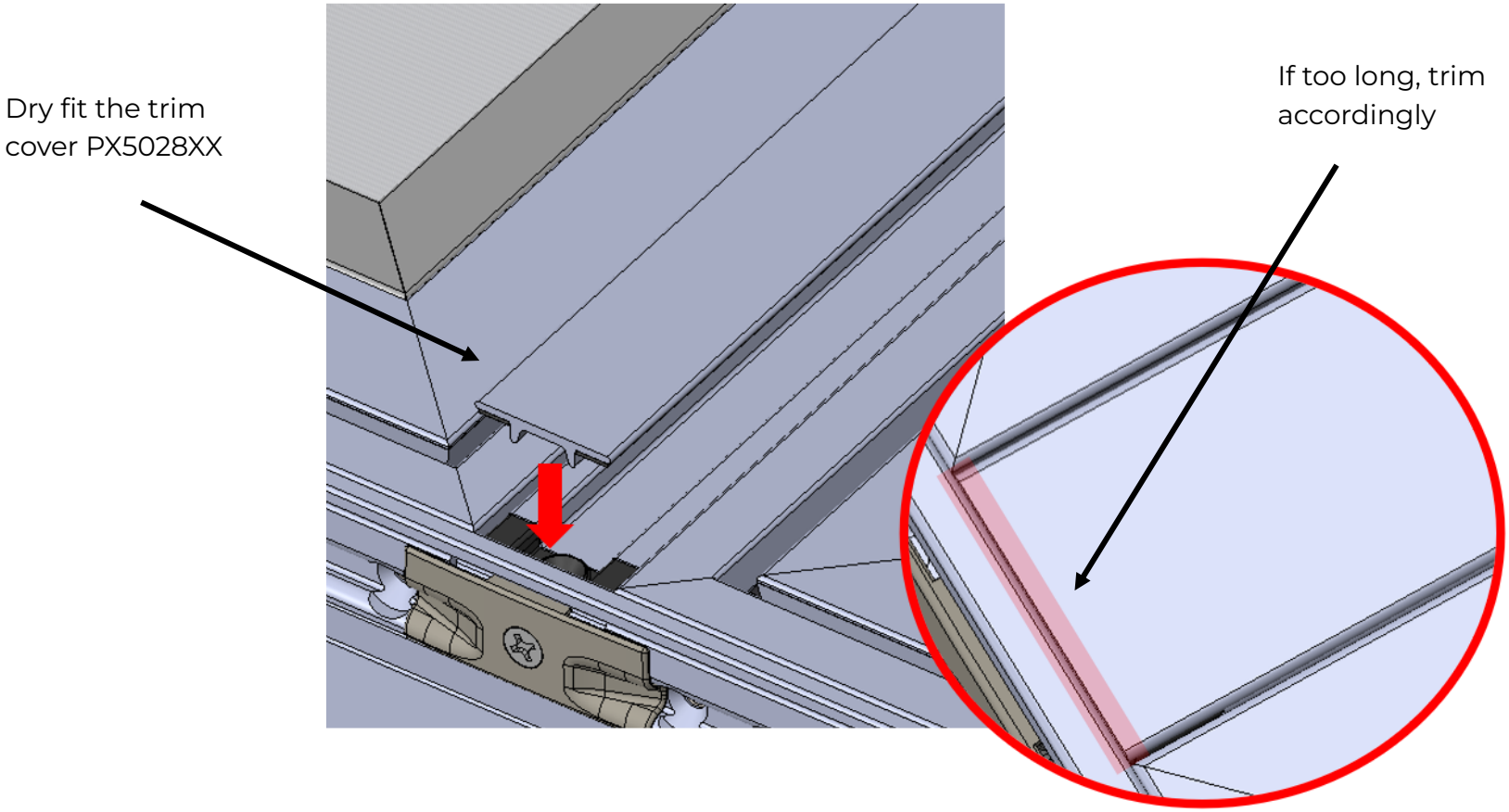

Step 34

Remove the backing on both foam on trim cover PX5028XX.

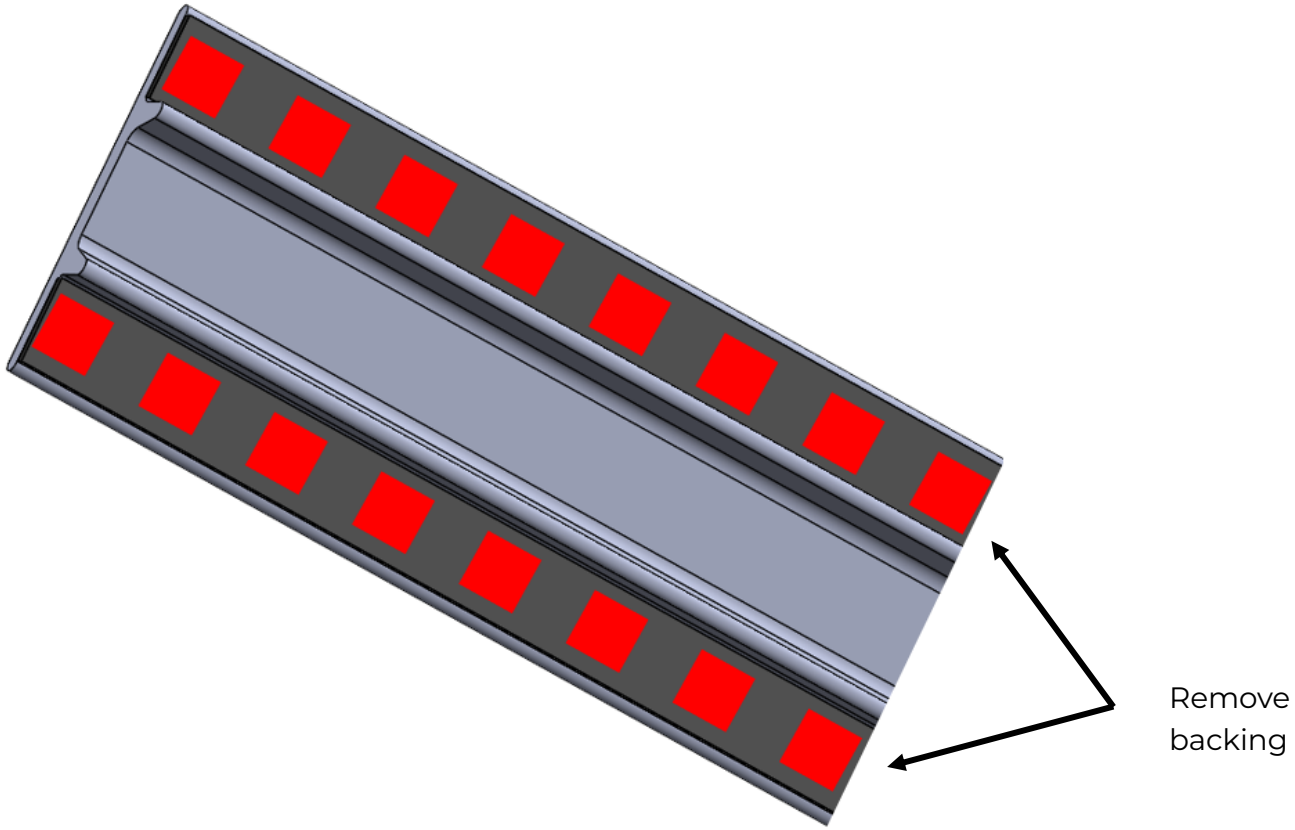

Step 35

Center the exterior trim cover PX5028XX between the requested accessories. Press it onto the mull bar EX7308MI.

Trim cover PX5028XX will sit between the accessories

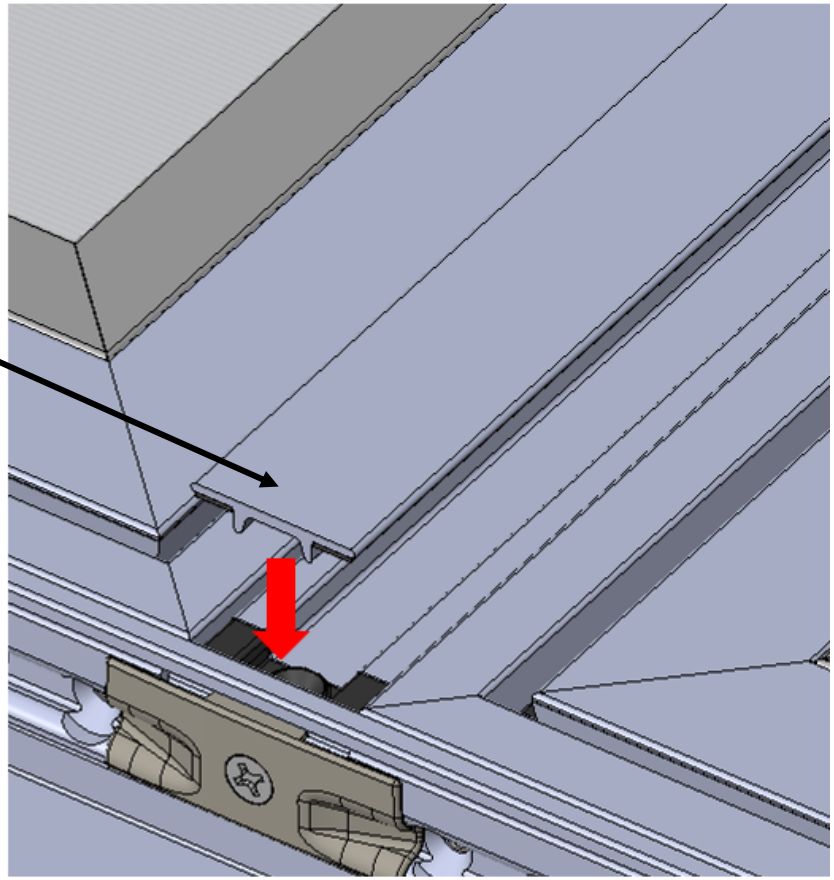

Step 36

Repeat step 33 and 35 for every additional mull bar, if applicable.

Step 37

Prior to installing the mulled unit, fully insert a mull anchor RF4302GA into each end cap IM3121BL of every mull bar EX7308MI. Each mull bar EX7308MI must use two (2) mull anchors RF4302GA, one at each end.

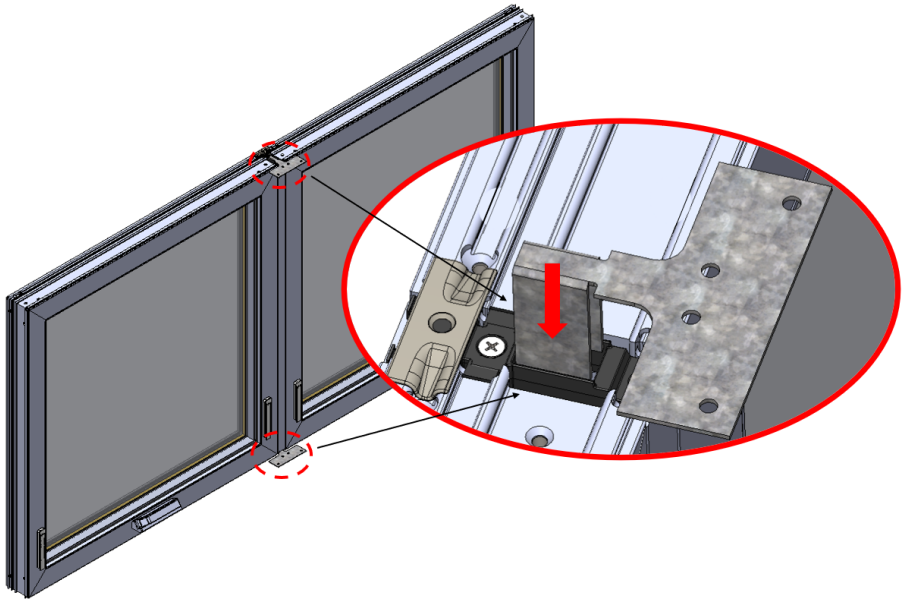

ATTENTION

If final product has mounting fin, go to step 38A
If final product has no mounting fin (block frame), go to step 38B

Step 38A
Mounting fin

Install the mulled unit into the rough opening by following the Milgard's Installation Recommendations for Mounting Fin Windows

Step 38B
Block frame

Install the mulled unit into the rough opening by following the Milgard's Installation Recommendations for Flange (Z-Bar) and Finless Windows and C700 Fastener Schedule.

ATTENTION

If mulling windows together, go to step 39A
If mulling a window to a door, go to step 39B

Step 39A

Window mulled to window

Install two (2) of the supplied fasteners FA0821SS in the holes shown below into each mull anchor RF4302GA of every mull bar EX7308MI.

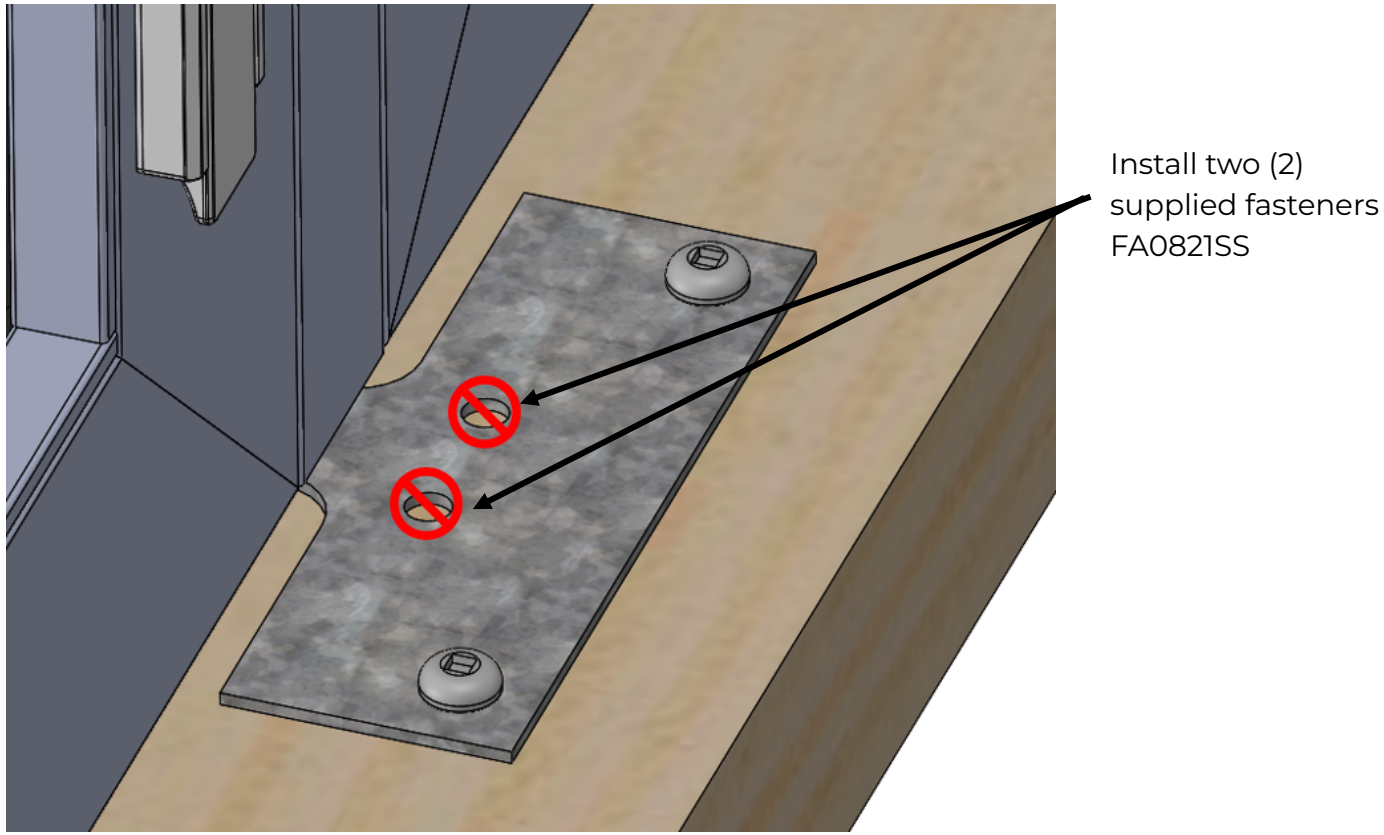

Step 39B

Door mulled to window

Install four (2) of the supplied fasteners FA0821SS into each mull anchor RF4302GA of the mull bar EX7308MI.

Install four (2) supplied fasteners FA0821SS

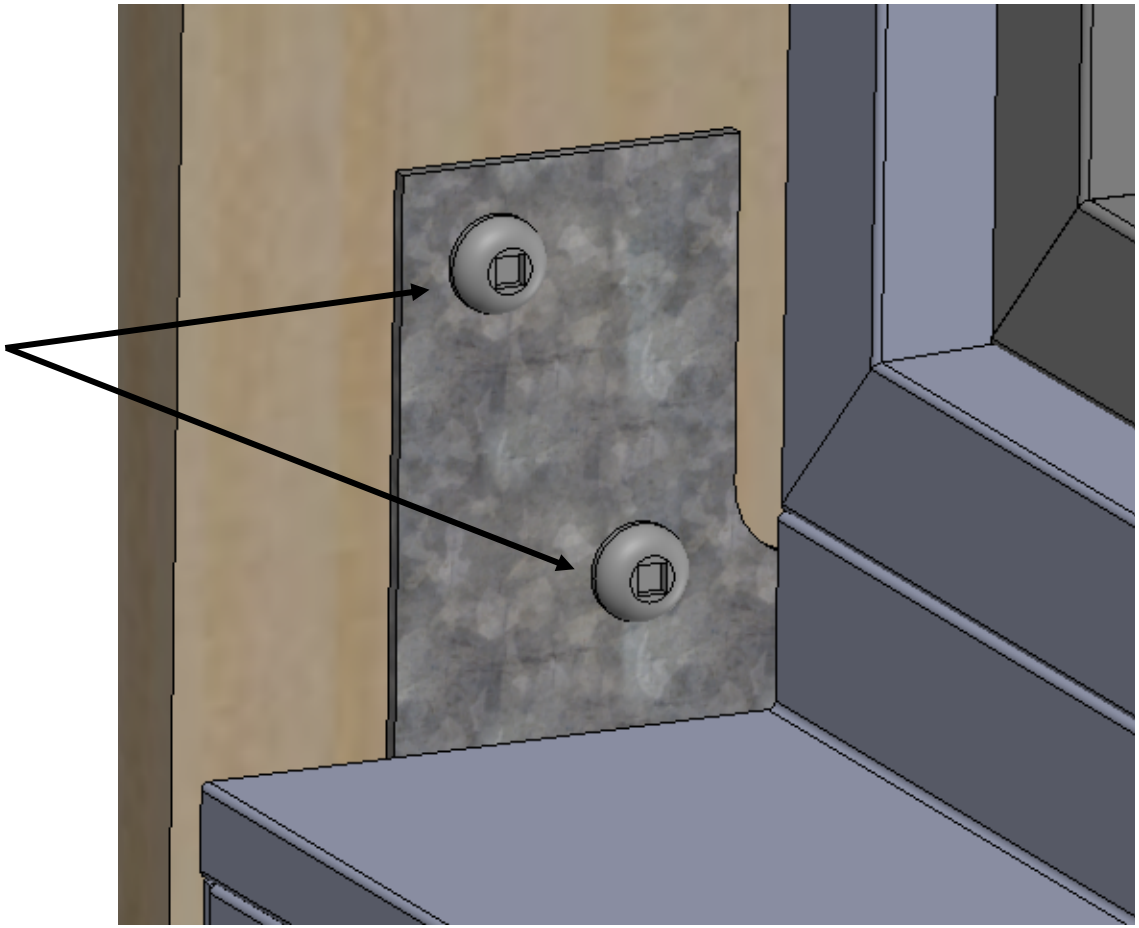

MILGARD®

SHAPES

C700 Delta Mull Field Mull Instructions

MILGARD

The following instructions are for shape-to-window or shape-to-shape mulled units. Shape units have integral mounting fins. The following instructions are for vertical or horizontal mulled units. If mulling window-to-window, window-to-door or block frame units, refer to section “FIBERGLASS”

Mull Sequence:

Start from one end and work across
Vertical: Left to Right OR Right to Left
Horizontal: Bottom to Top OR Top to Bottom

ATTENTION

Prior to starting the mulling process, ensure that the shape units have no mounting fin on the side where the mull will go

ATTENTION

If unit is a shape, go to step 1A follow by step 2
If unit is rectangle/square, go to step 1B follow by step 2

Step 1

Share unit

Place the unit onto a flat surface, exterior face down with the surface to mull in towards you. Ensure that the weld flash is flush to the frame on the adjacent side of the mull and on the perpendicular side of the mull. On the mull side where there is no mounting fin and accessory, ensure that the mounting fins end flush to 0.020” recessed to the edge of the frame. Ensure that the accessories also end flush to 0.020” recessed to the edge of the frame, inside of the accessory grooves.

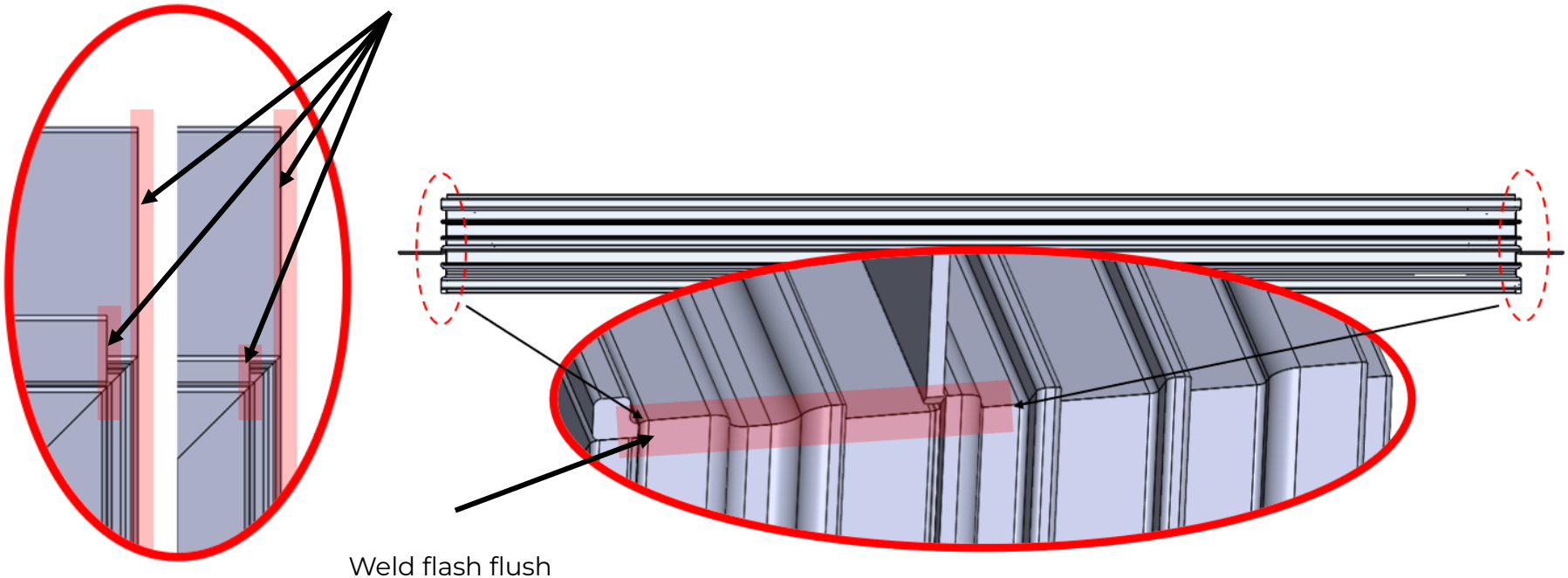

Weld flash flush
to the frame

Step 1B

Rectangle/Square unit

Place unit onto a flat surface, exterior face down with the surface to mull towards you. Ensure that the sealant is flush to the frame, if any.

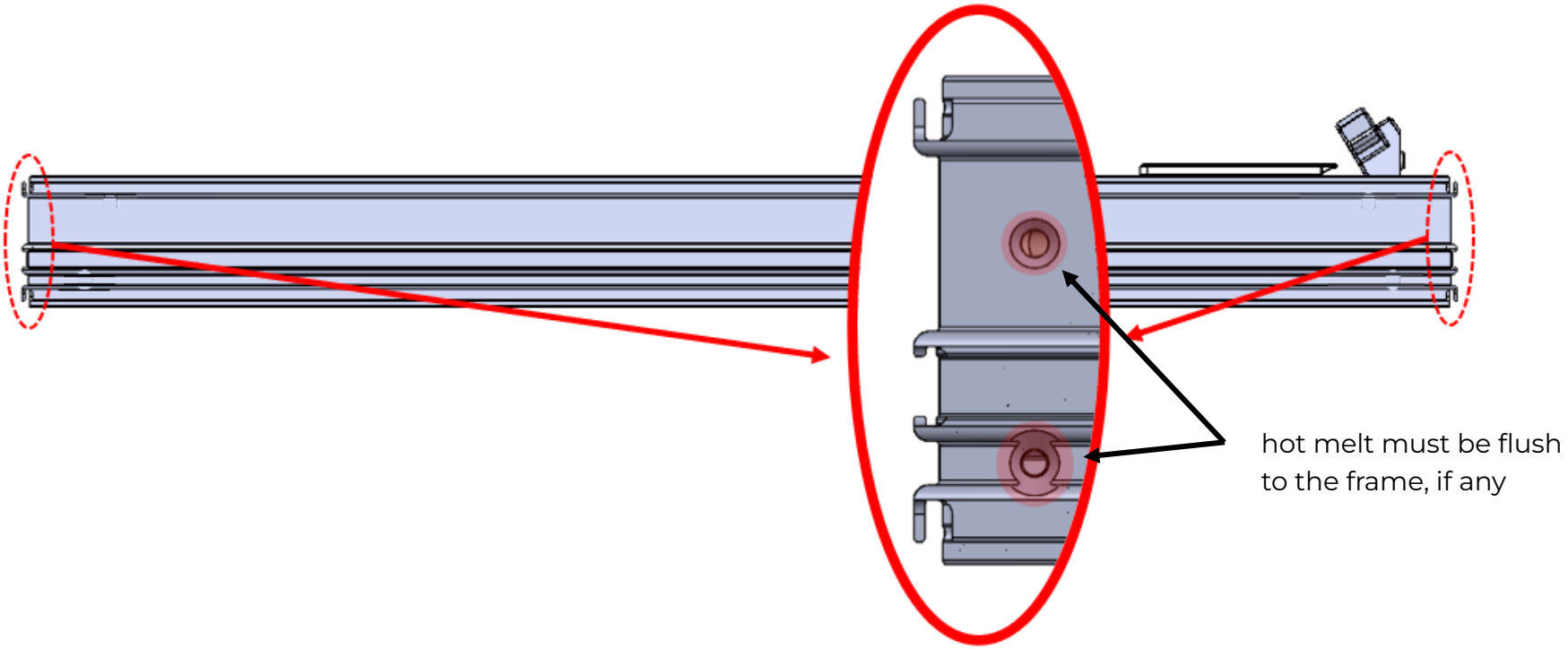

Step 2

By pressing on it, apply tape SE4209ABL to the window, inside of the fin groove on the adjacent side of the mull. The tape should extend the entire length of the fin groove and must be continuous. The tape SE4209ABL must be flush to 1/16” shorter to the bottom of the fin groove perpendicular to the tape.

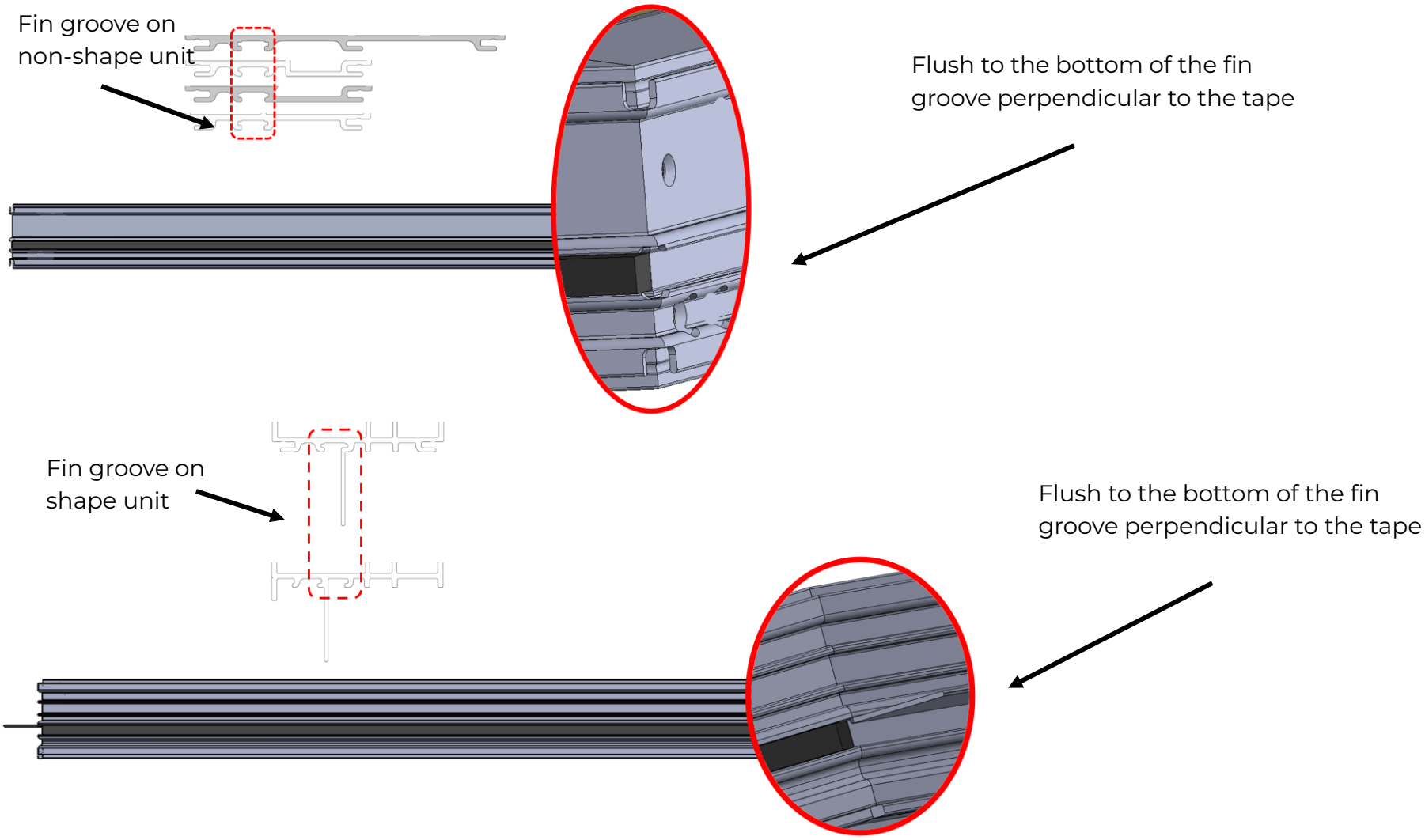

Step 3

Remove the protective liner from the tape SE4209ABL.

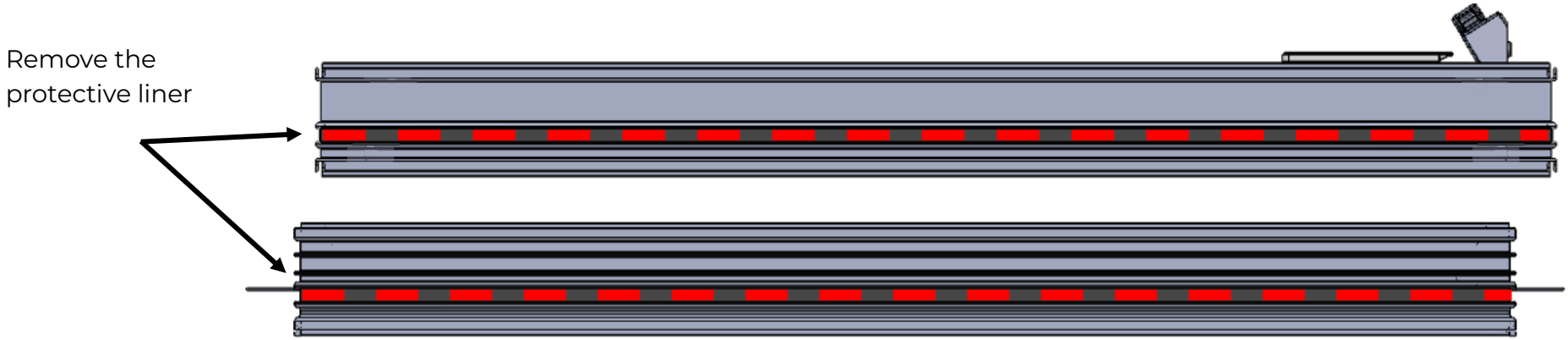

Step 4

Repeat step 1 through 3 to every unit that will be mulled.
For a triple mulled unit, the middle unit will have SE4209ABL on both sides.

Step 5

Still with the exterior facing down, align the units to have the tape SE4209ABL facing each other.

Window-to-Shape

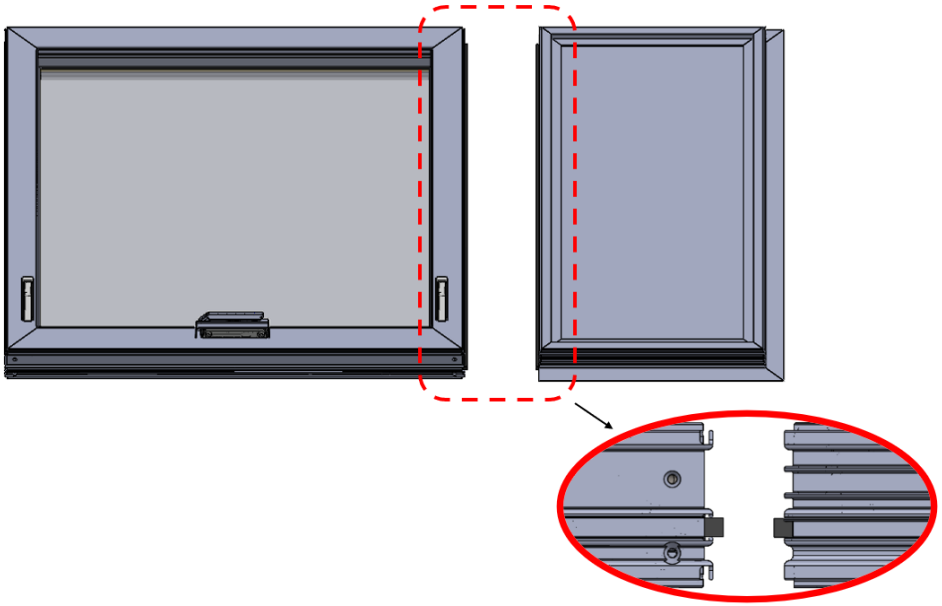

Shape-to-Shape

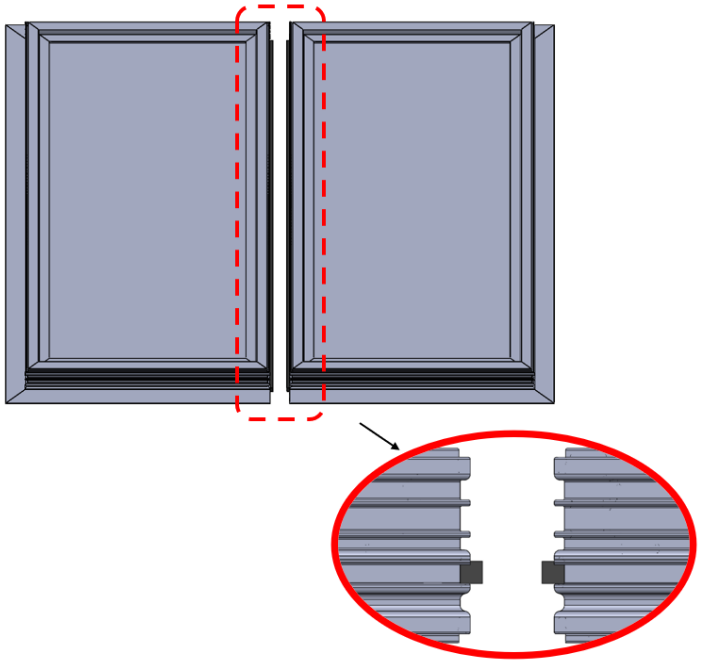

Step 5

Lift the side of one of the two (2) units that needs to be mulled and insert the leg of the mull bar EX7308MI into the exterior accessory groove of the frame. The leg of the mull bar EX7308MI must be fully inserted into the accessory groove of the frame. Ensure that both ends of the side with the tape is supported. If mounting fins are present, do not use the mounting fin to lift the unit.

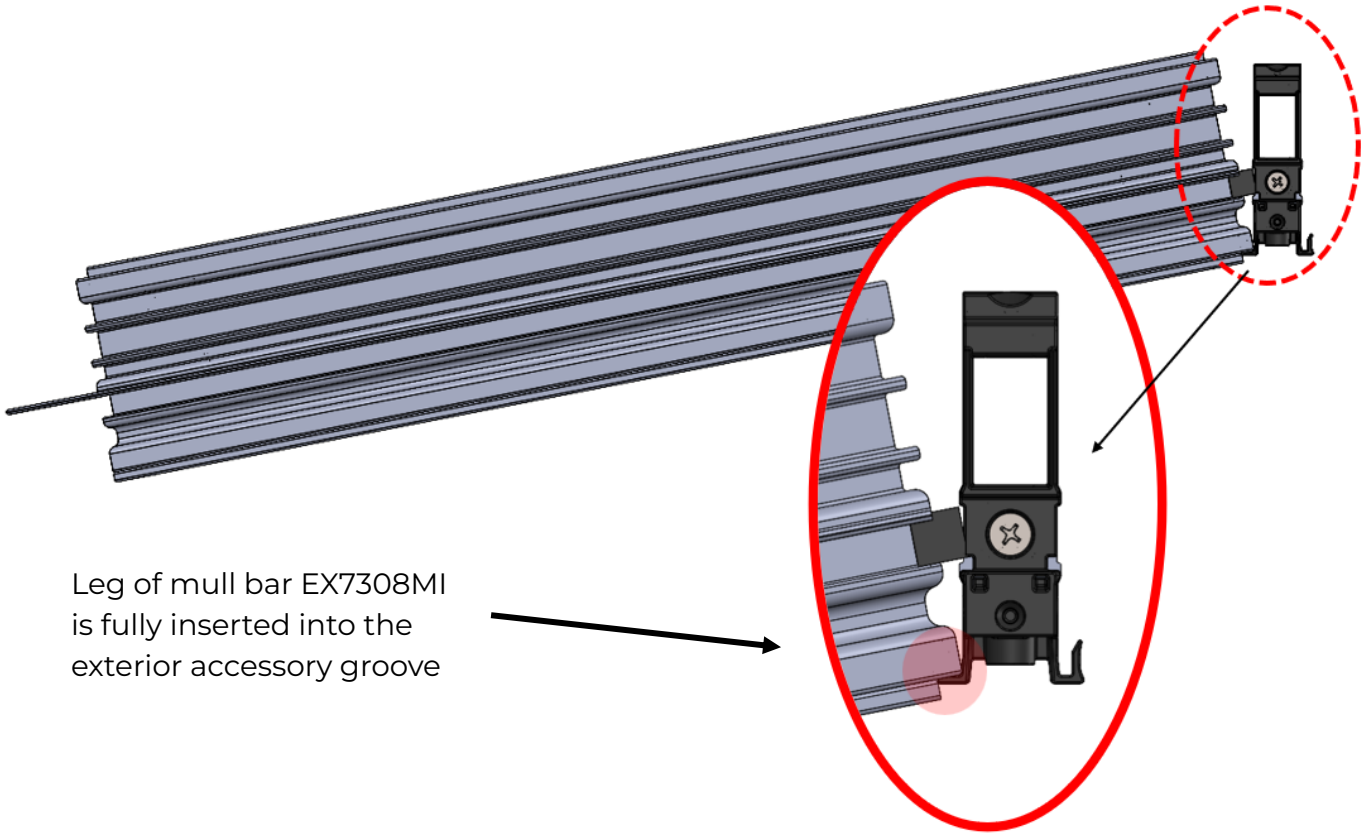

Step 6

Lift the side of the second unit that needs to be mulled and insert its exterior accessory groove leg into the leg of the mull bar EX7308MI. The accessory groove leg of the unit must be fully inserted. Ensure that both ends of the side with the tape is supported. If mounting fins are present, do not use the mounting fin to lift the unit.

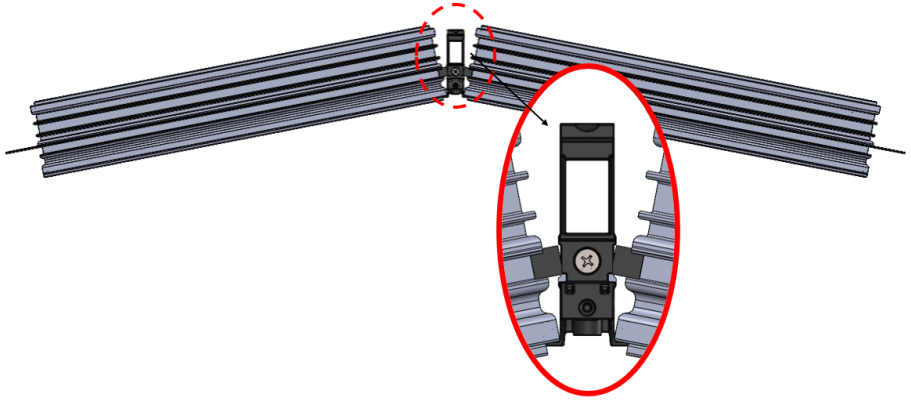

Step 7

While still having both ends of the mull joint supported, set down the assembly, making sure that the units stay engaged with the mull bar EX7308MI. If mounting fins are present, do not use the mounting fin to lift the unit.

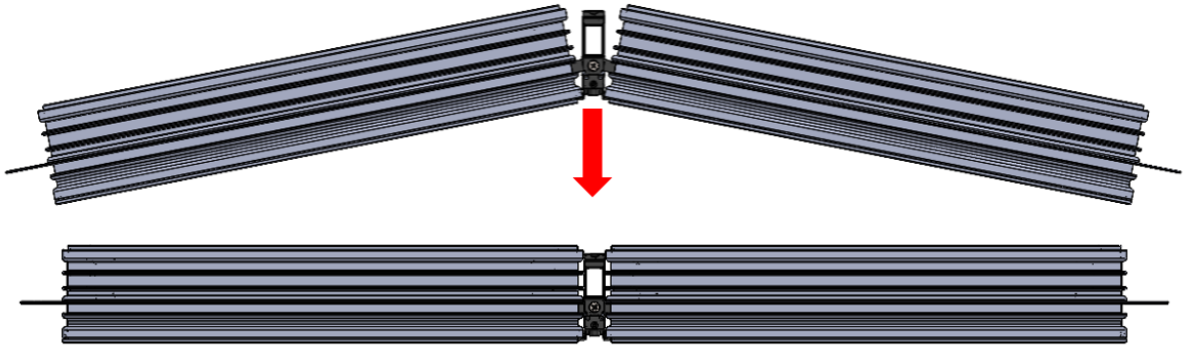

Step 8

Align the mull bar EX7308MI with the 2 units. The recess channel from the end cap IM3121BL must be flush with the groove of the units. Units should also be aligned.

The recess channel from the end cap IM3121BL must be flush with the fin groove of the units

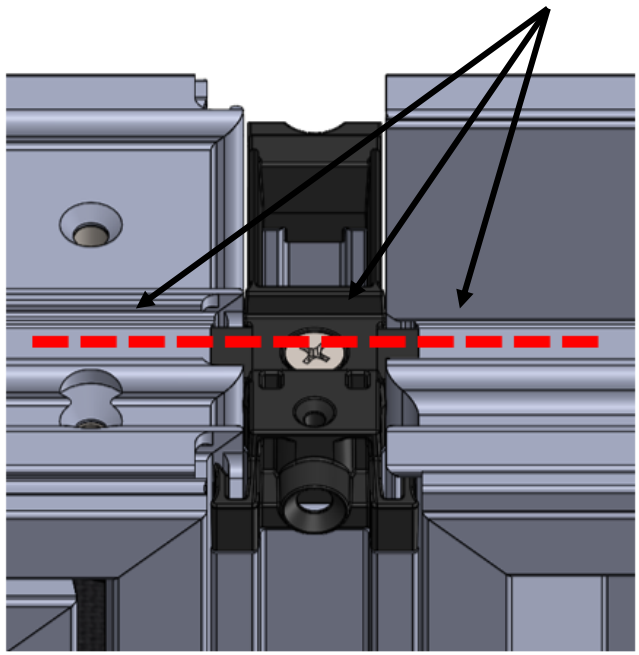

Window-to-Shape

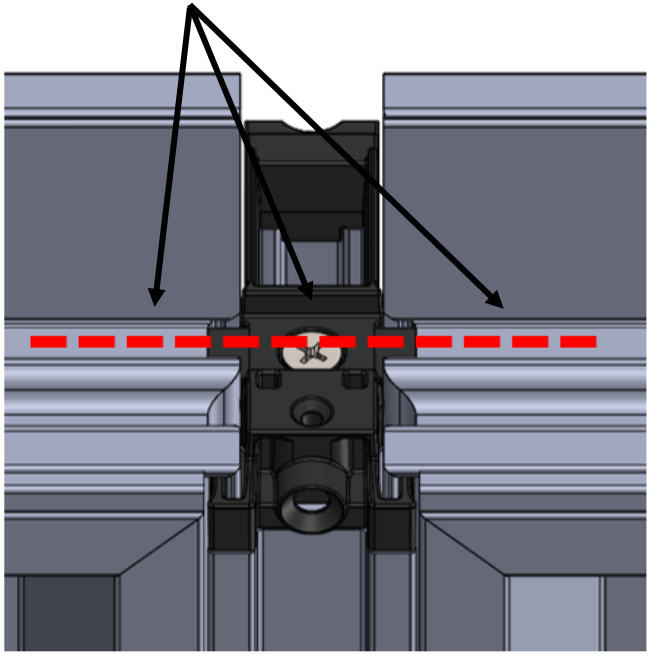

Shape-to-Shape

Step 9

Remove the protective liner from the tape on the pressure plate EX7309MI.

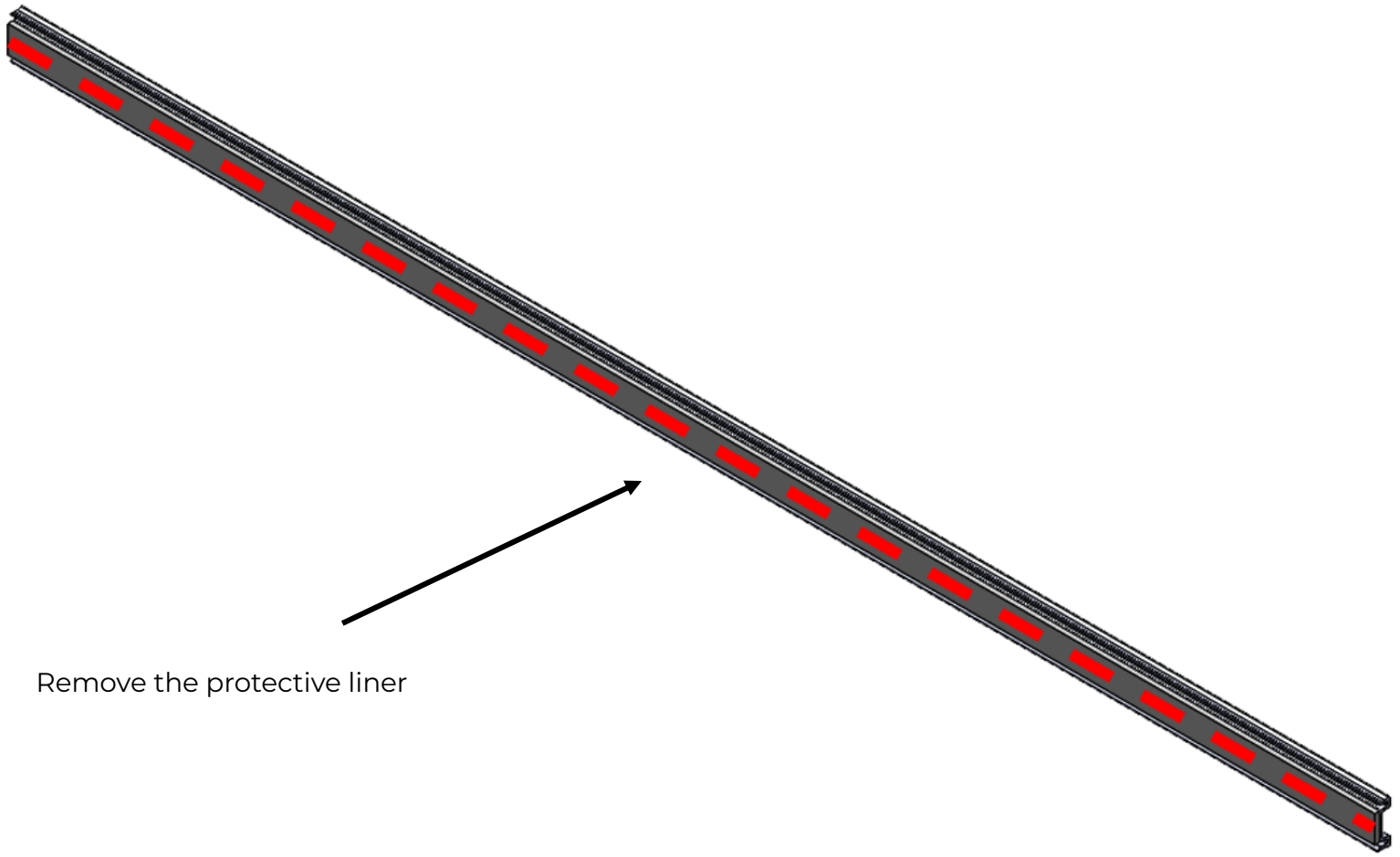

Step 10

Align the pressure plate (EX7309MI) between the 2 end caps (IM3121BL). The pressure plate must not sit on the end cap (IM3121BL).

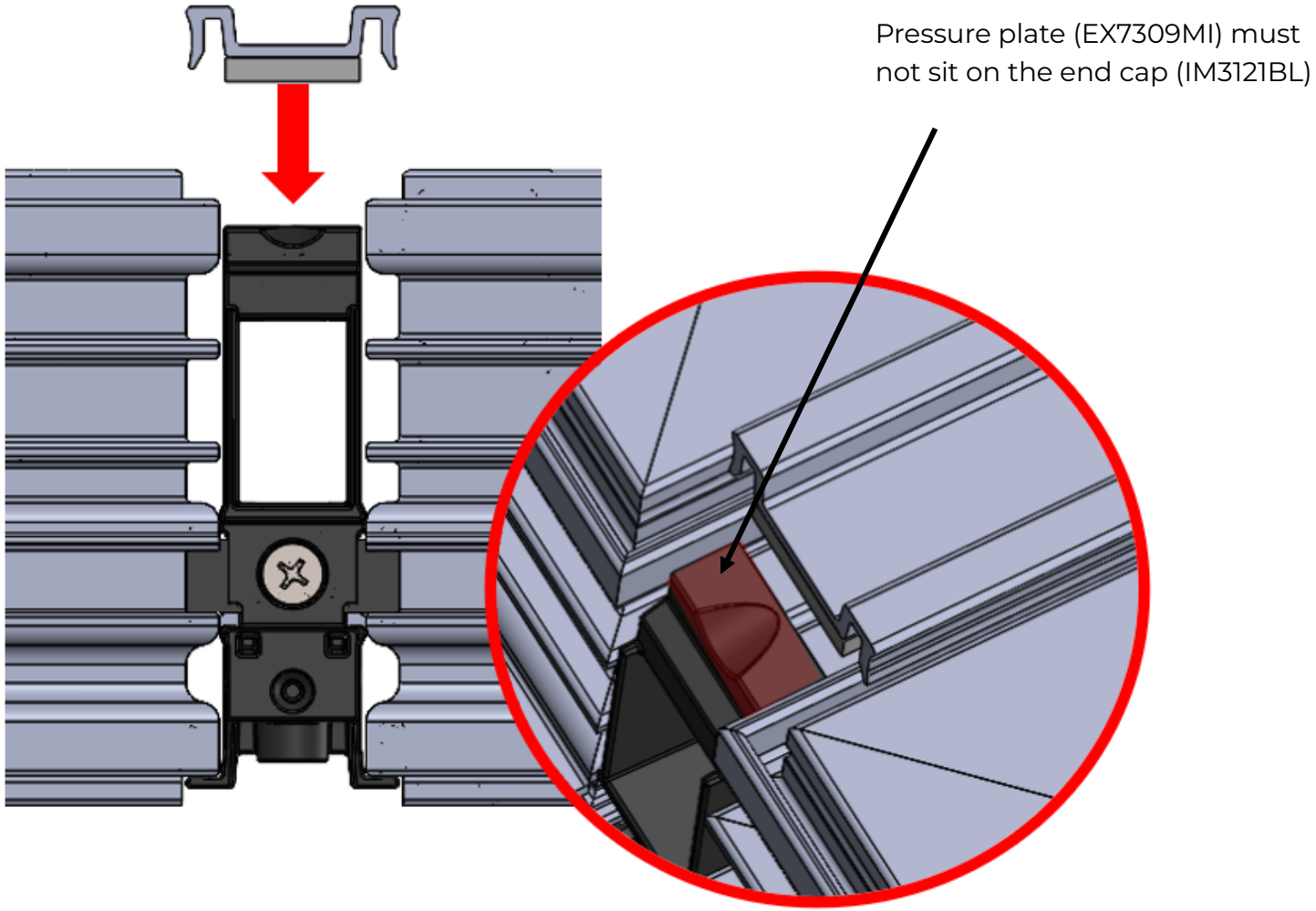

Step 11

While squeezing the two (2) units together, fully insert the pressure plate EX7309MI legs into the accessory groove of the units. If needed, use a rubber mallet to gently insert the pressure plate EX7309MI. The gap between the end cap (IM3121BL) and the pressure plate (EX7309MI) should be approximately equal on both sides of the pressure plate EX7309MI.

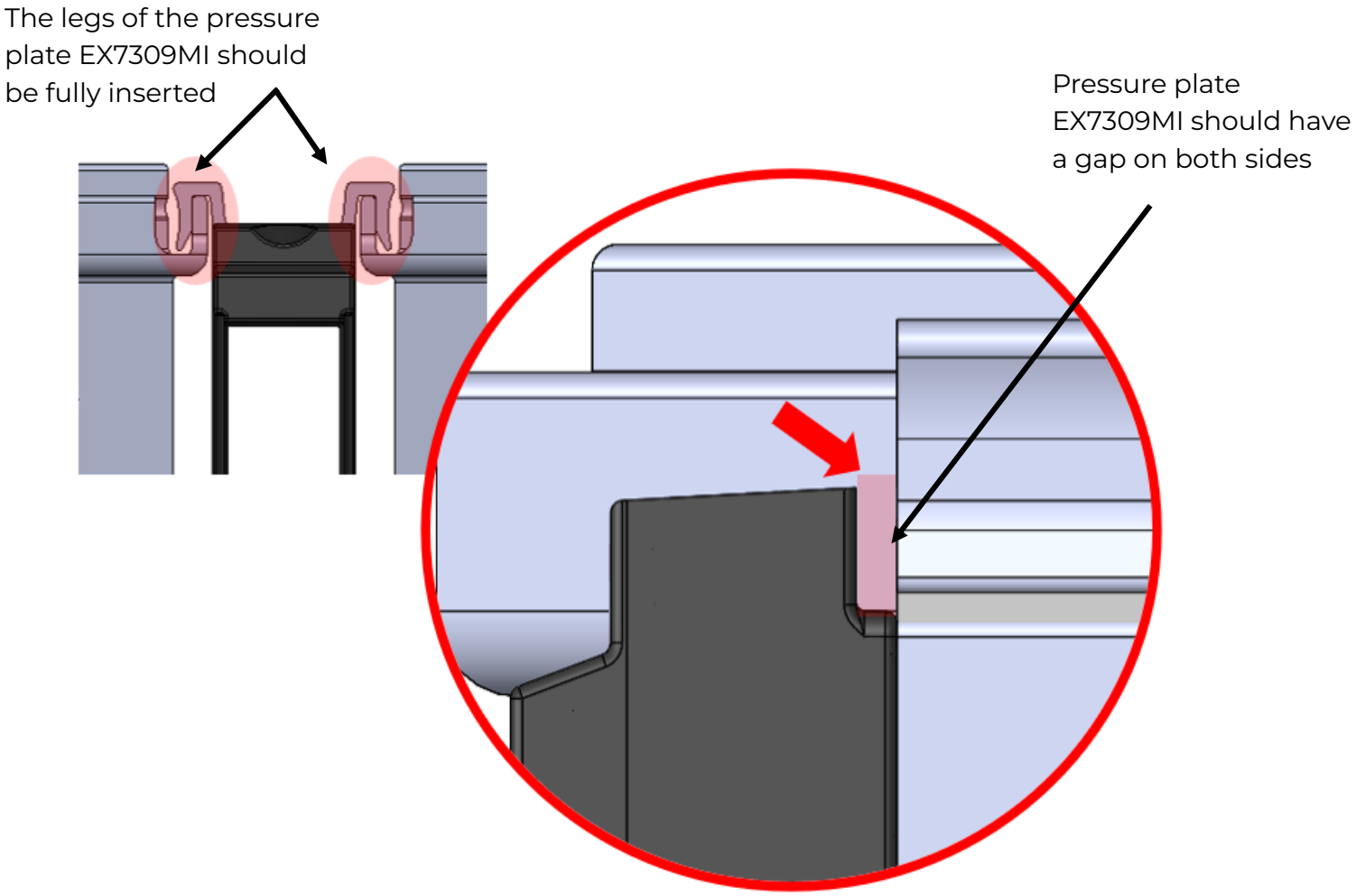

Step 12

Install fastener FA8209SS in every pre-drilled hole of the pressure plate EX7309MI. The fastener is fully inserted when the bottom of the fastener head is seating on the pressure plate and both mull bars EX7308MI and EX7309MI are fully seating on the accessory grove legs of the units. No debris should be under the head of the screw. Do not overdrive or distort the pressure plate with the fasteners.

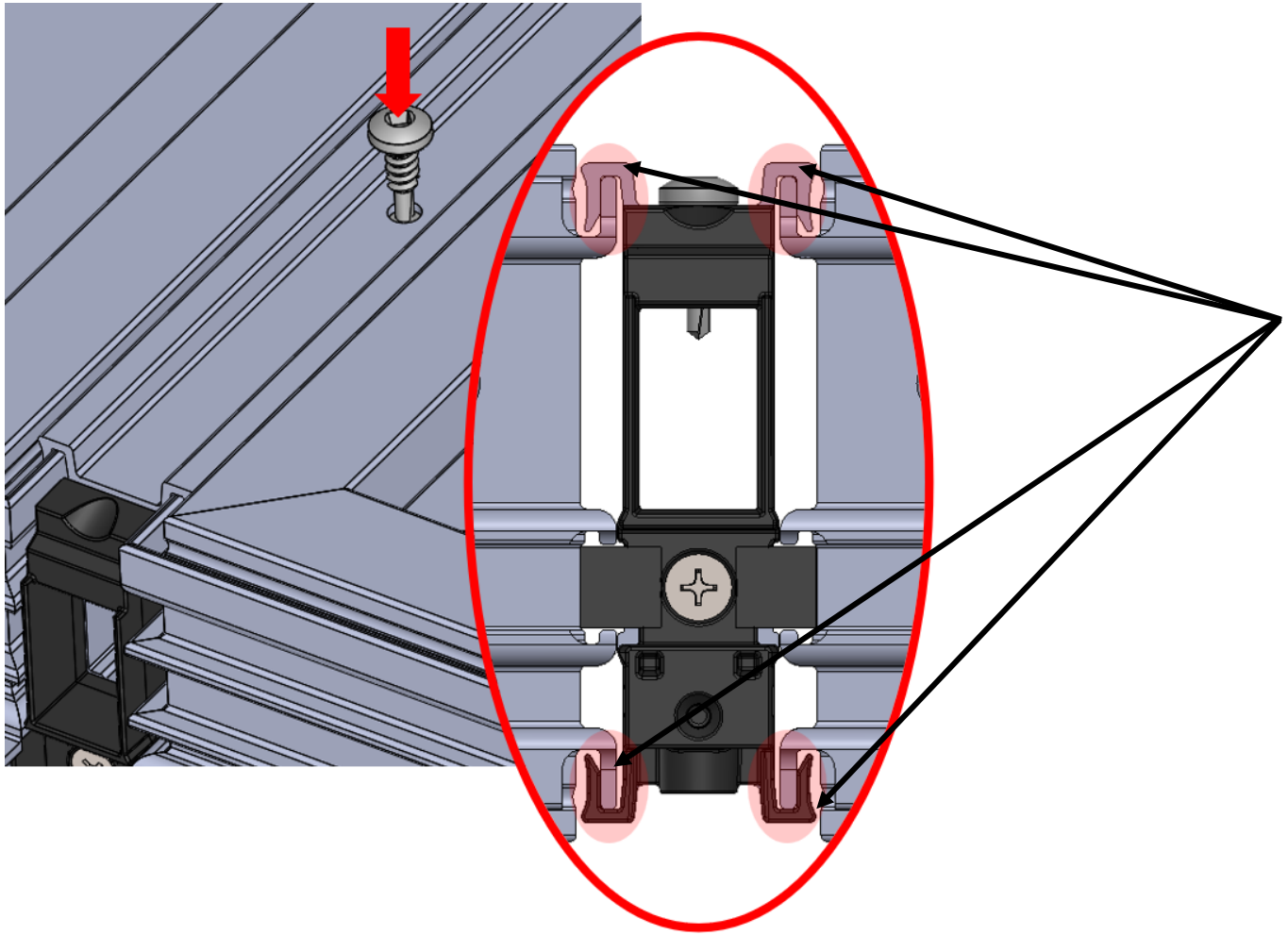

Both mull bars (EX7308MI & EX7309MI) legs are fully seating on the accessory groove legs of the units

Step 13

Repeat step 5 through 12 for every additional mull bar, if applicable

Step 14

For the interior cover of the mull, take the shorter of the two (2) trim cover (PX5028XX). Remove the backing on both foam tapes that the interior trim cover PX5028XX has.

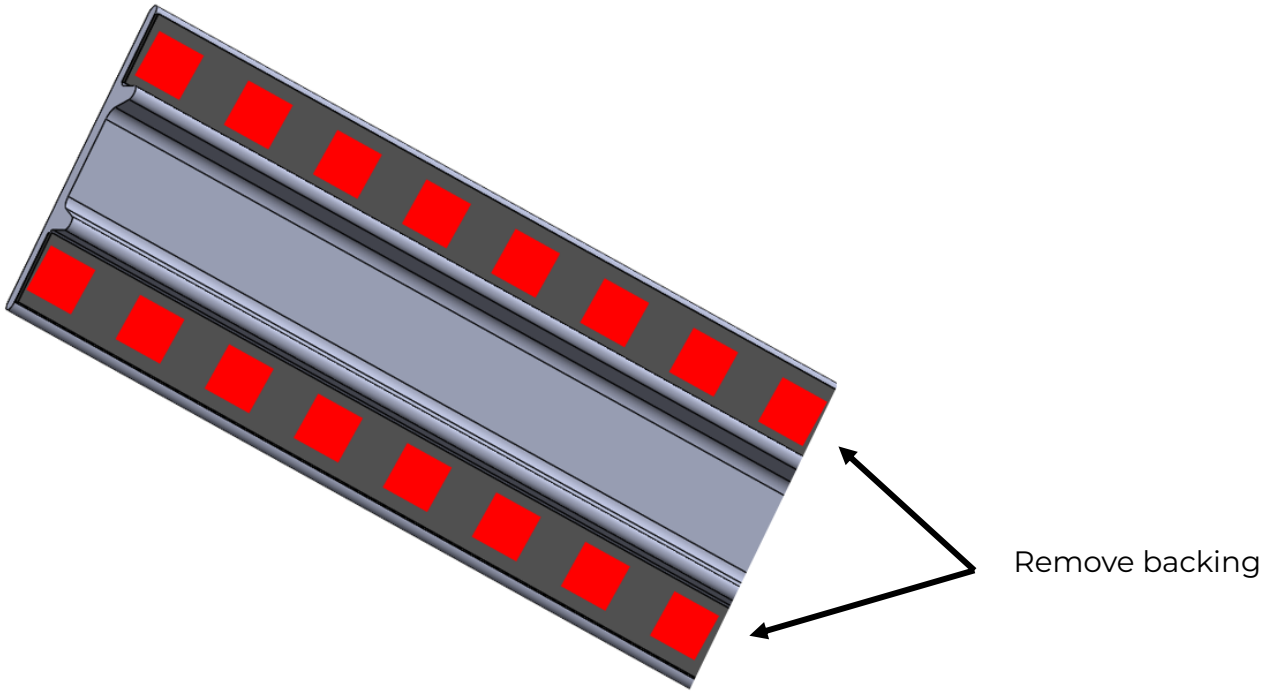

Step 15

Center the interior trim cover PX5028XX with the units, on the pressure plate EX7309MI. The trim cover PX5028XX will not pass the accessory groove of the units on both sides. Apply the interior trim cover PX5028XX by pressing it onto the pressure plate EX7309MI.

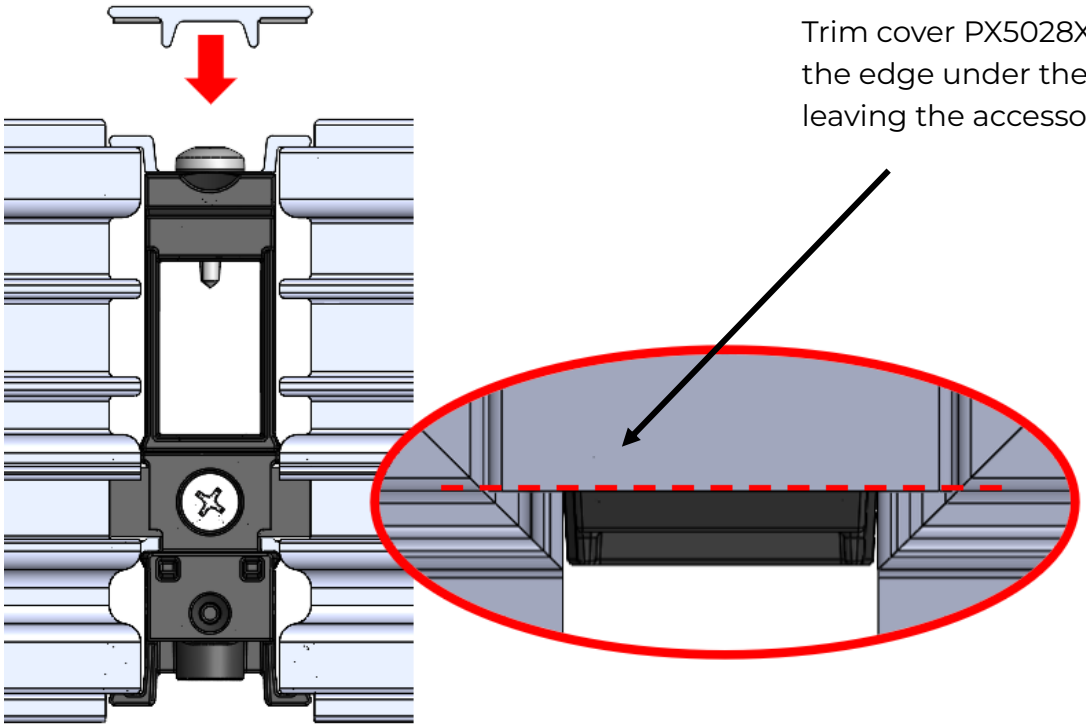

Trim cover PX5028XX will align with the edge under the accessory groove, leaving the accessory groove visible

Step 16

Repeat step 14 and 15 for every additional mull bar, if applicable.

Step 17

While supporting the mull, turn over the mulled unit, interior facing down. The unit should be flipped over in a direction that is perpendicular to the joint of the mull as shown below. Do not use the mounting fins to turn the unit over.

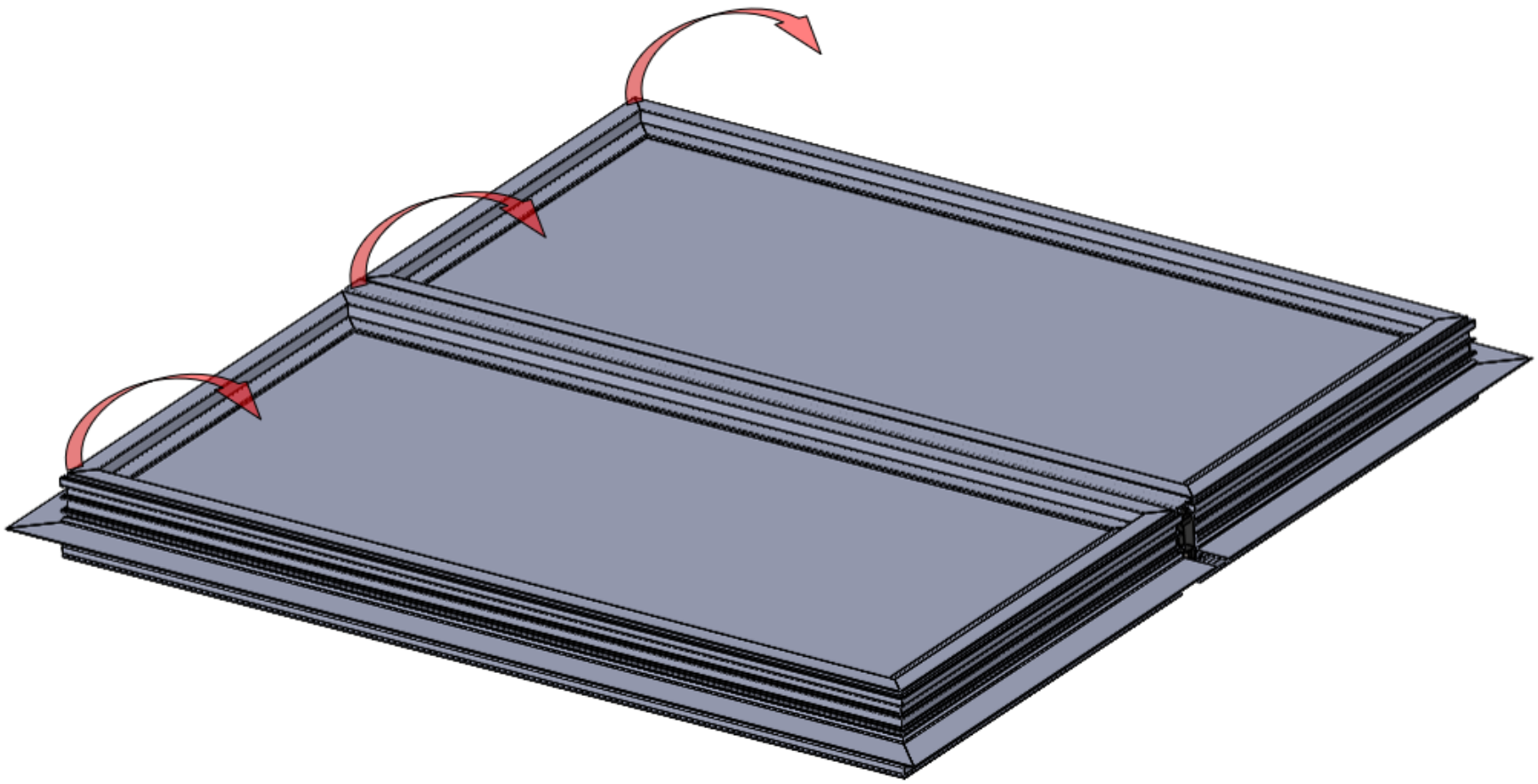

Step 18

With the supplied Pecora sealant SE0034CL, apply 3/16” bead of sealant at the edges of the frames shown below, at the mull joint, where the sealing cap IM3122XX will be placed, approximately 1 inch from the center of the end cap IM3121BL.

Area where the supplied Pecora sealant must be applied

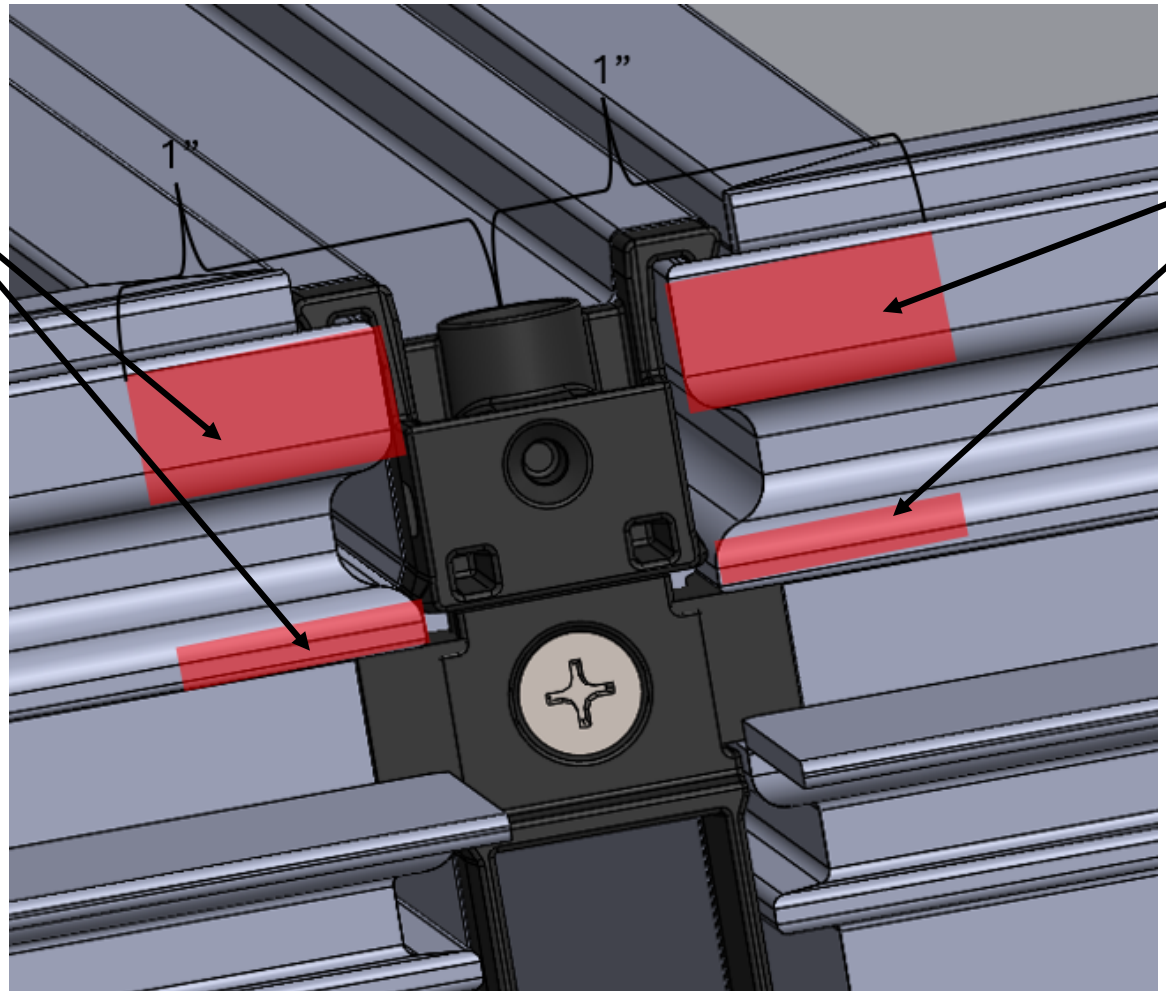

Area where the supplied Pecora sealant must be applied

Step 19

Insert the sealing cap IM3122XX into the end cap IM3121BL.

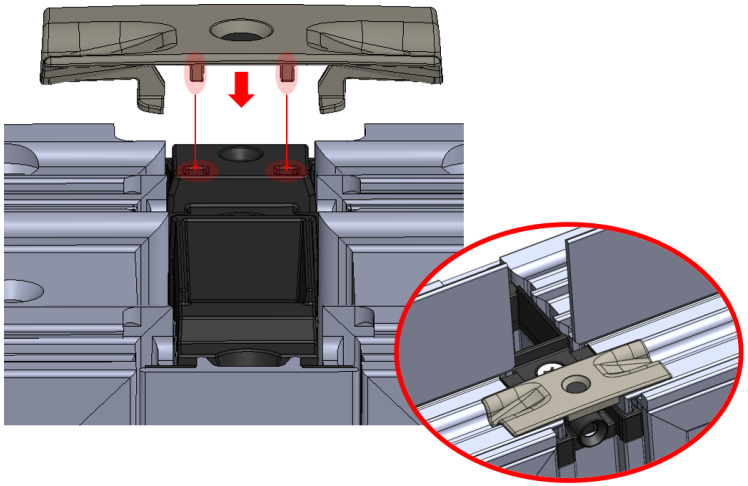

Step 20

Install fastener FA0315XX in the hole of the sealing cap IM3122XX, until the fastener is flush to the sealing cover IM3122XX.

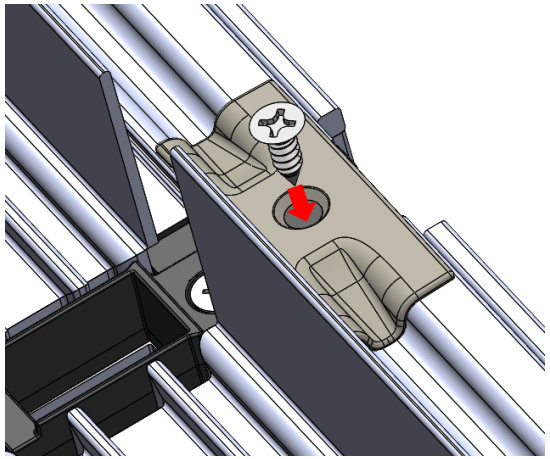

Step 21

Repeat step 18 through 20 for every mull joint

ATTENTION

If mulling shape-to-shape, follow step 22 through step 24 follow by step 33
If mulling window-to-shape, follow step 25 through step 32 follow by step 33

Step 22

Shape-to-Shape

At the mull joint, starting from the fin groove, apply the mull label LA0021MM at the center of the joint. The mull label LA0021MM must cover the entire exterior of the fin joint. Fold the mull label LA0021MM over the fin to connect the joint. On the interior side of the fin, cut two (2) small incisions on the label to insert the left over in the end cap IM3121BL.

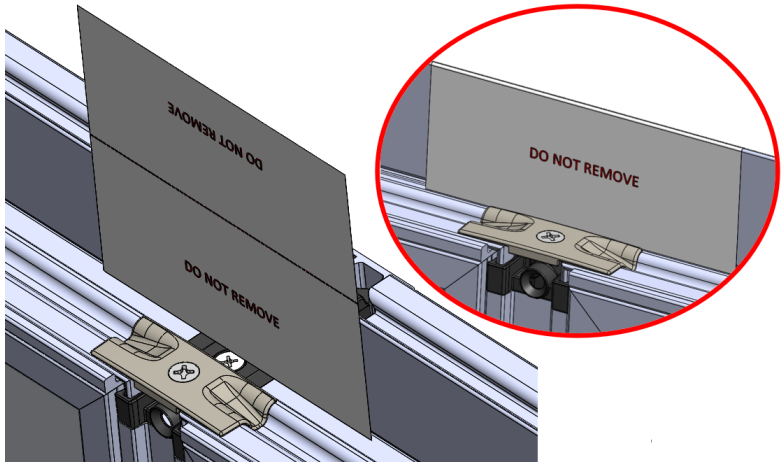

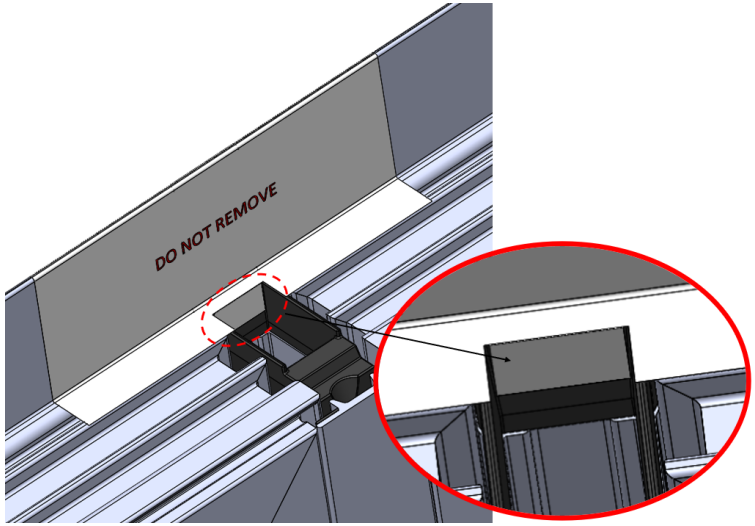

Step 23

Shape-to-Shape

With the supplied Pecora sealant SE0034CL, fill with sealant the top of the end cap and inside the fin groove on both units. The sealant must start at least 4 inches from the center of the end cap IM3121BL and must be continuous from one unit to the other unit. With the help of a spreader or spatula, smooth the sealant to be flush to the edge of the frame.

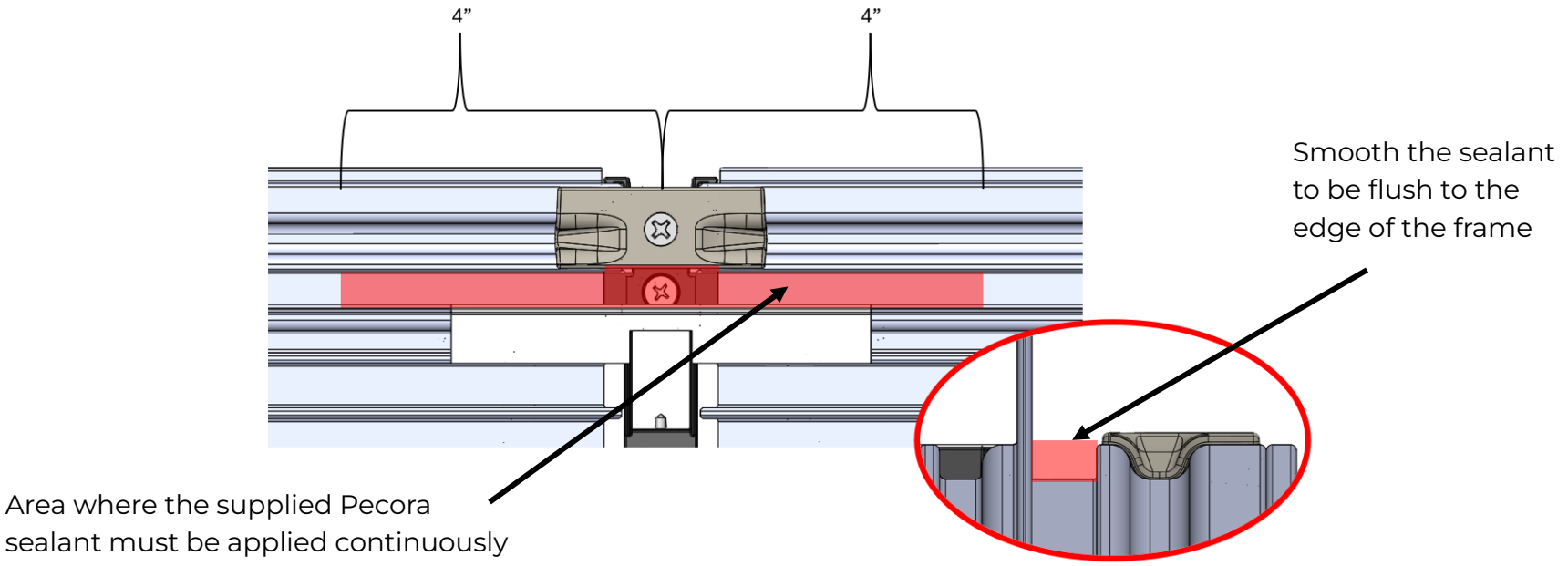

Step 24

Shape-to-Shape

Repeat step 22 and step 23 for every mull joint

Step 25
Window-to-Shape

With the supplied Pecora sealant SE0034CL, fill with sealant the top of the end cap and inside the fin groove of the unit with no fin. The sealant must start at least 4 inches from the center of the end cap IM3121BL and must be continuous from the unit to the end of the end cap IM3121BL.

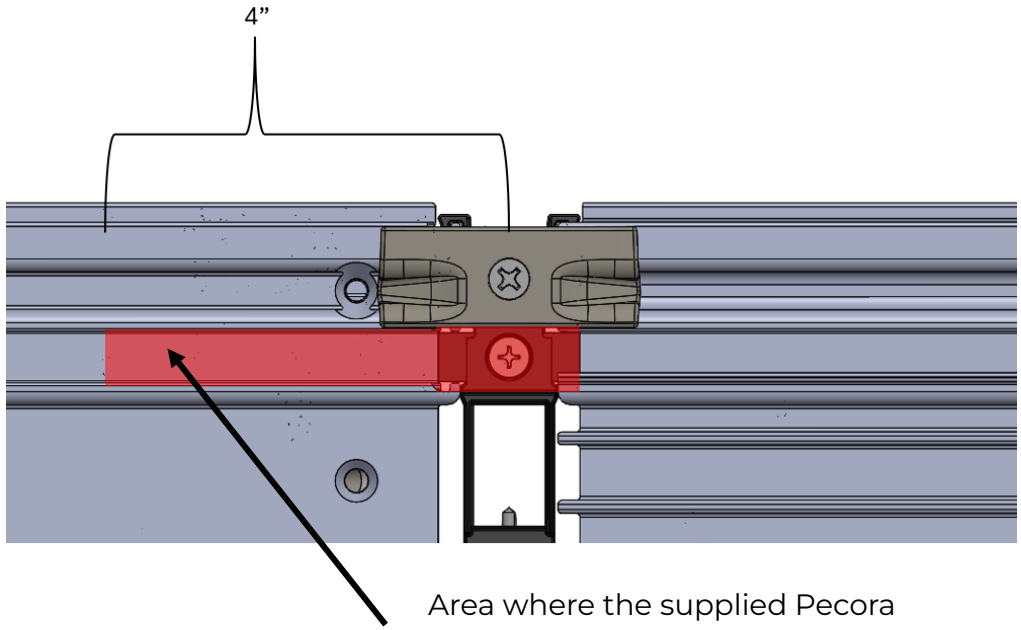

Step 26
Window -to-Shape

Repeat step 25 for every mull joint

Step 27

Window-to-Shape

Starting on one of the sides where sealant was applied, insert the fin VA5084 into the fin groove with the 90 degree edge first. The fin VA5084 should run through the mull joint and butt against the fin of the shape unit. Wipe the excess of sealant that follows the fin after the insertion. Leave the sealant in the fin groove channel.

Fin VA5084 must butt against the fin of the shape window. Wipe clean from the excess of sealant

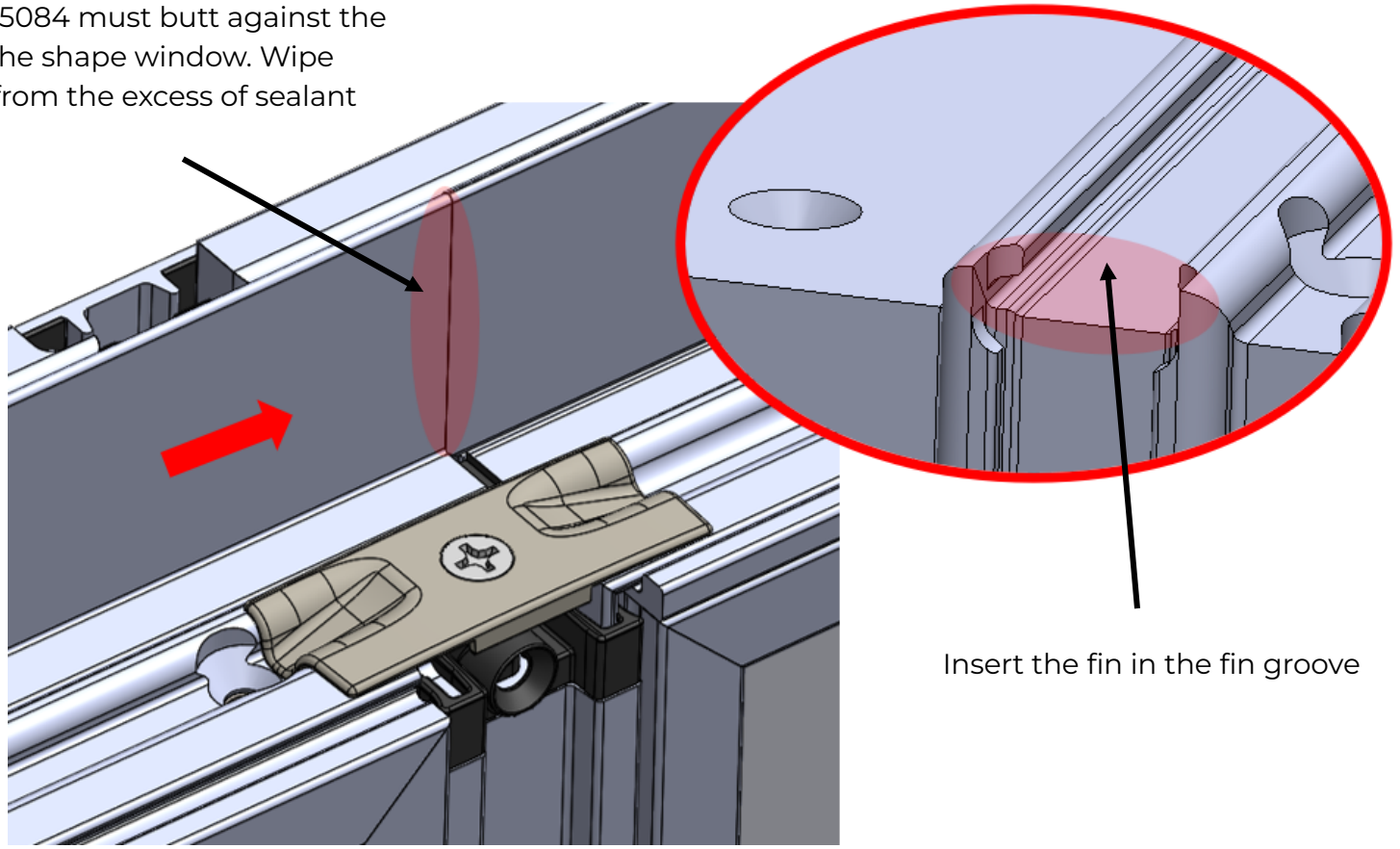

Insert the fin in the fin groove

Step 28

Window-to-Shape

Repeat step 27 on the other side of the unit where there is a mull joint. Insert the fin VA5084 into the fin groove with the 90 degree edge first. The fin VA5084 should run through the mull joint and butt against the fin of the shape unit. Wipe the excess of sealant that follows the mounting fin after the insertion. Leave the sealant in the fin groove channel.

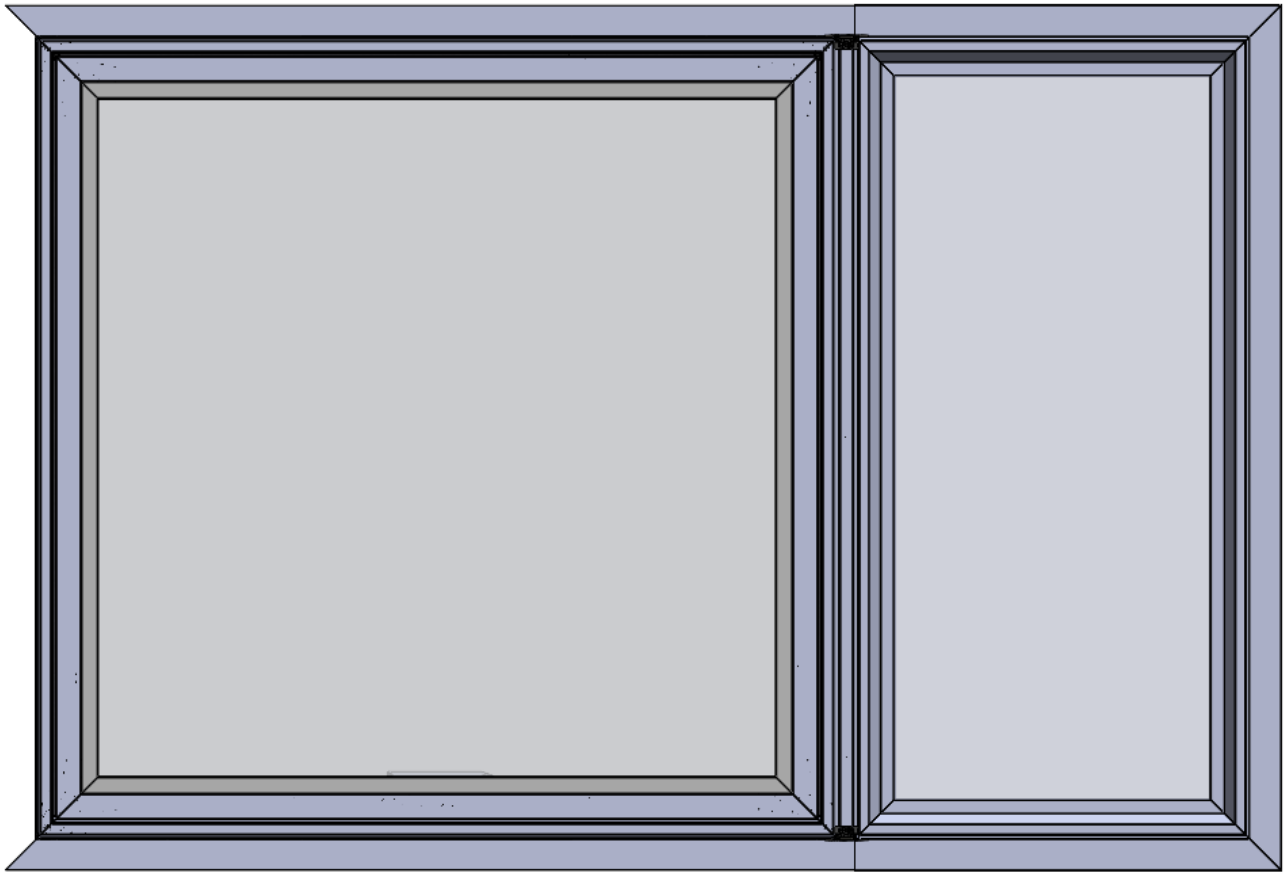

Step 29

Window-to-Shape

To pass the last fin in the fin groove, bend slightly the fin miter and slide the last fin at a slight angle.

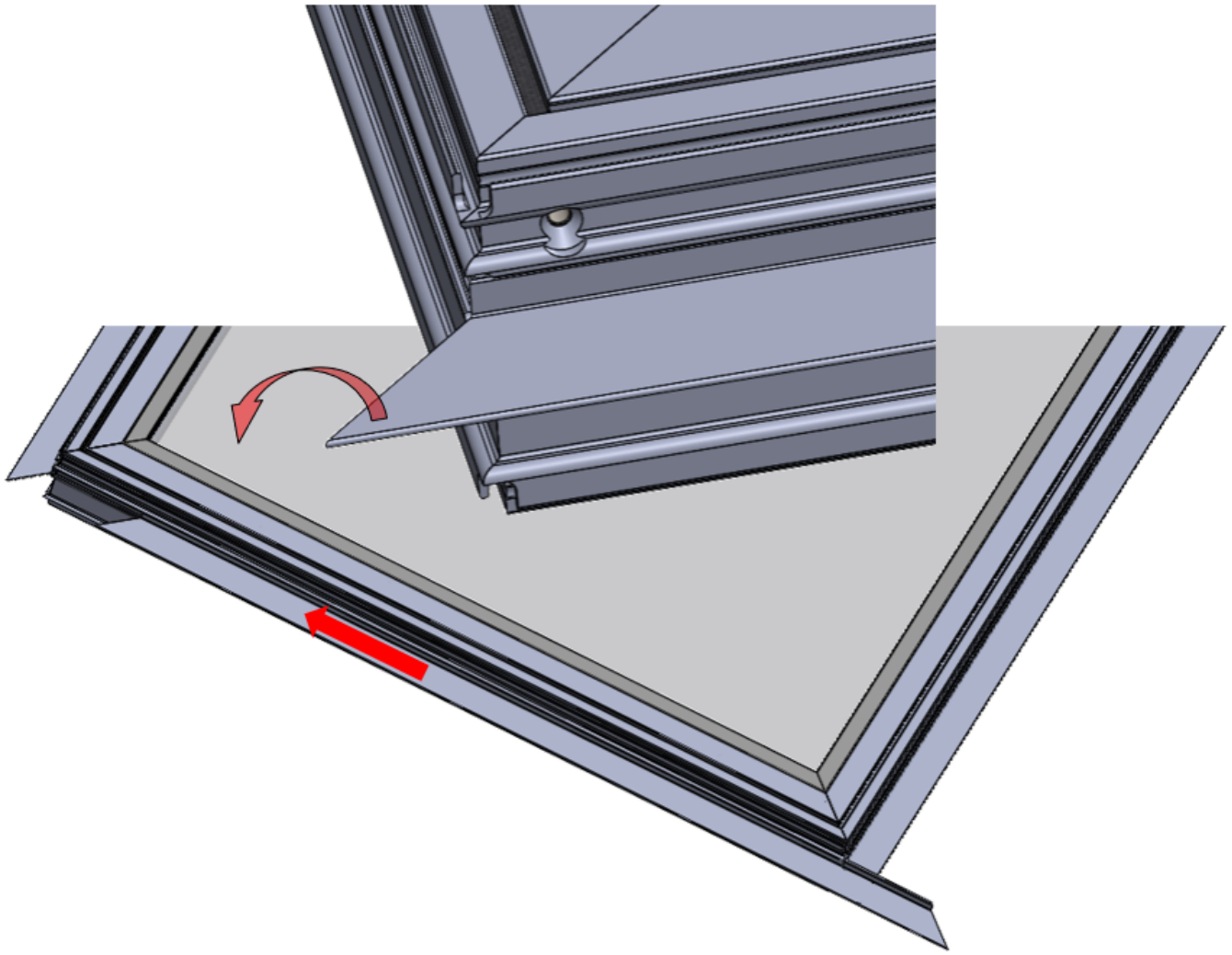

Step 30

Window-to-Shape

At the fin joint, apply the mull label LA0021MM at the center of the joint. The mull label LA0021MM must cover the entire exterior of the fin joint. Fold the mull label LA0021MM over the fin to connect the joint. On the interior side of the fin, cut two (2) small incisions on the label to insert the left over in the end cap IM3121BL.

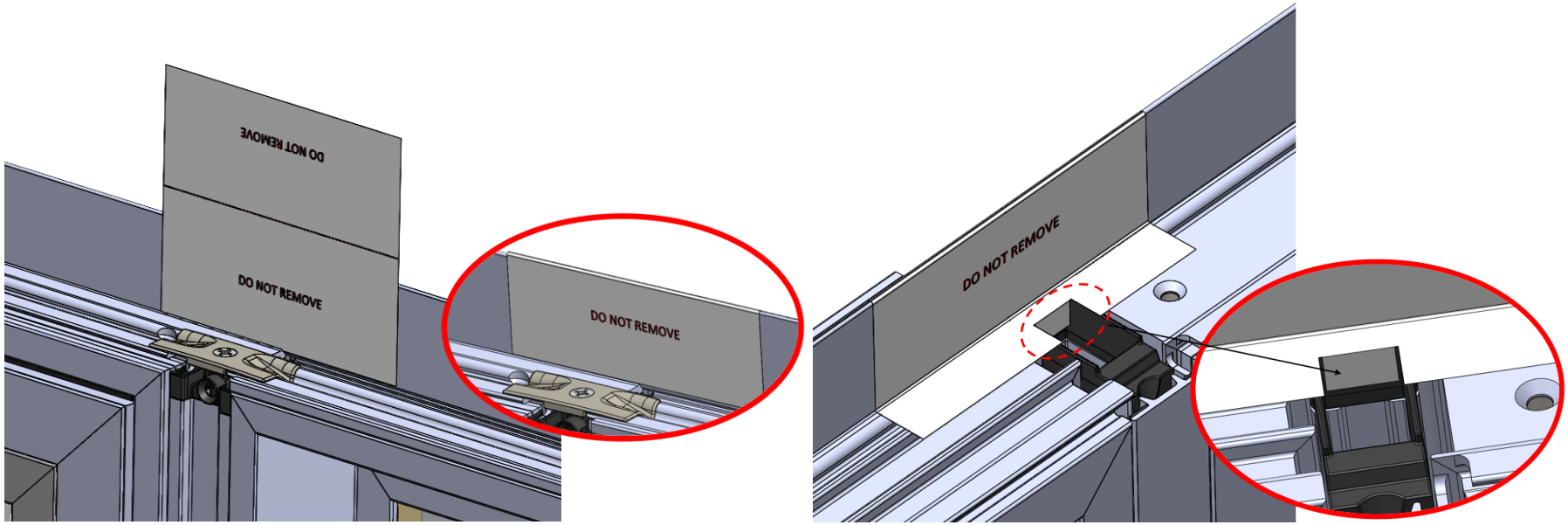

Step 31
Window-to-Shape

With the supplied Pecora sealant SE0034CL, fill with sealant the inside the fin groove on the shape unit. The sealant must start at least 4 inches from the center of the end cap IM3121BL and must be continuous from one unit to the mounting fin. With the help of a spreader or spatula, smooth the sealant so the sealant fully touches the edge of the mounting fin. The sealant must go over the mounting fin and over the edge of the frame.

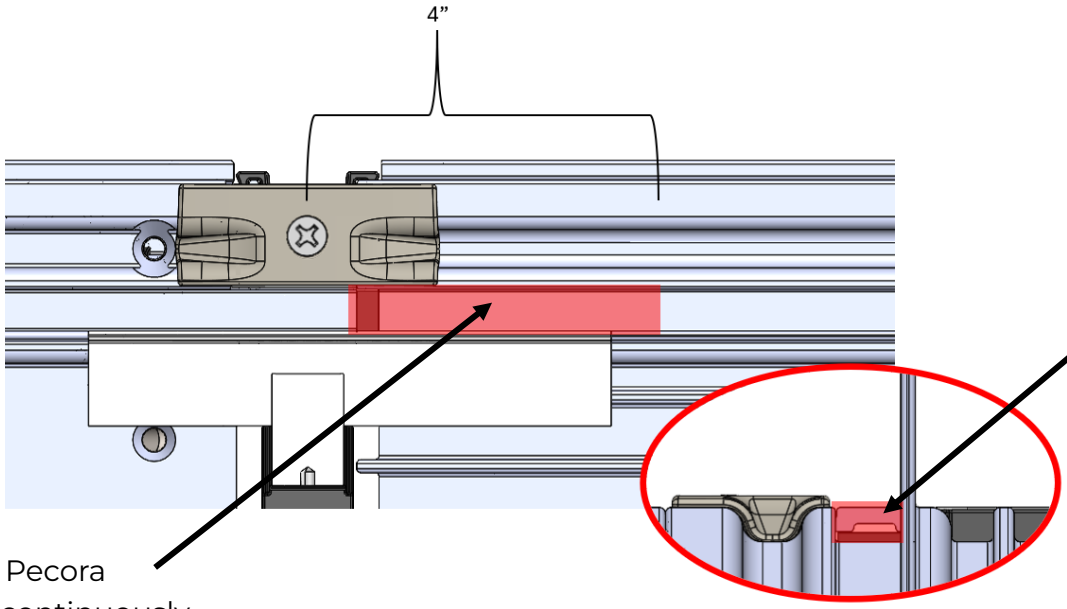

Step 32
Window -to-Shape

Repeat step 30 and step 31 for every mull joint

Step 33

Window-to-Shape

Apply the corner labels LA0220MM at the fin corners of the non-shape unit. The corner labels LA0220MM must cover the entire exterior of the fin miter. The fold of the corner labels LA0220MM must be on the interior side of the fin.

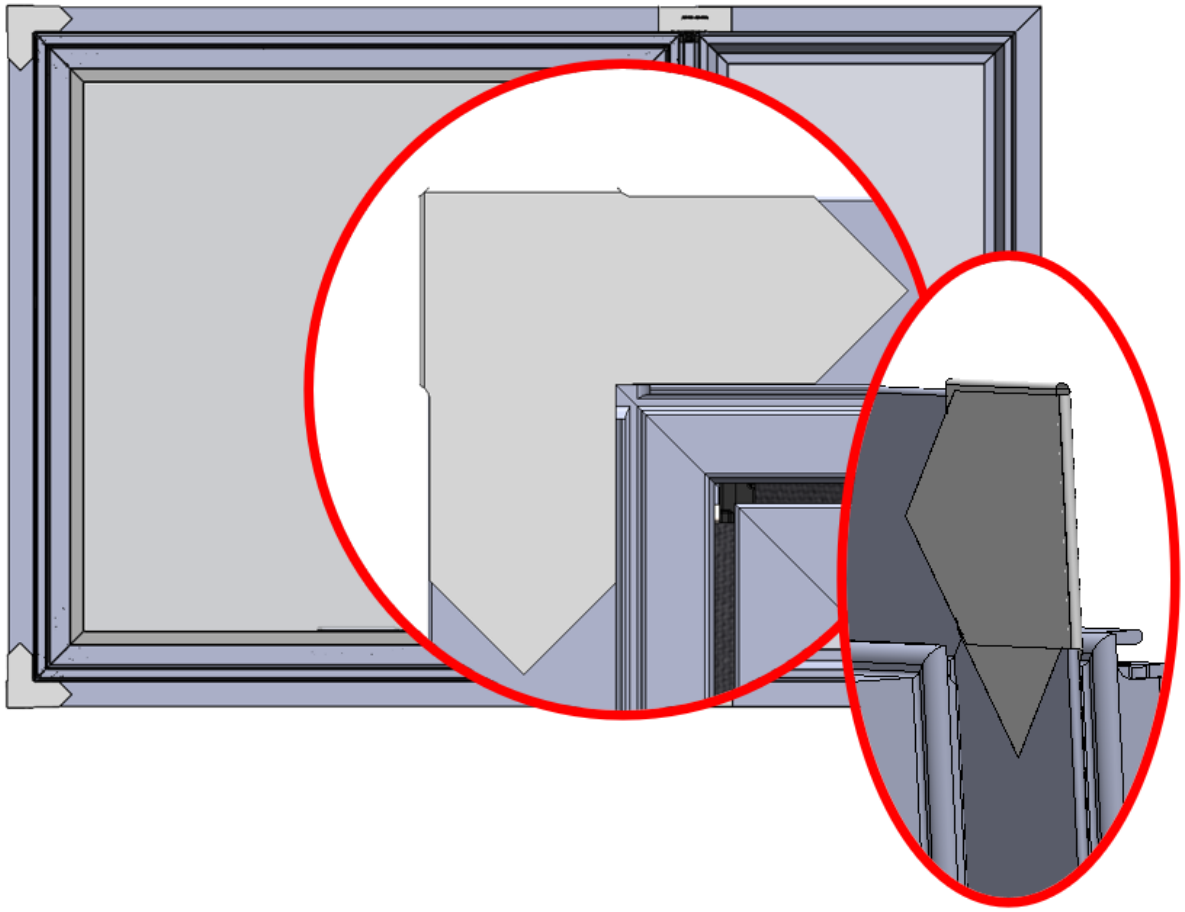

Step 34

Window-to-Shape

Using a rubber mallet, install the ordered exterior accessories (EX7302XX or EX7303XX) into the accessory grooves on all three (3) sides. The accessories with the 90 degree edge must be adjacent to the mull bar EX7308MI. The accessory must not pass the accessory groove in which the mull bar EX7308MI is attached to and must stop at the inside edge of the groove.

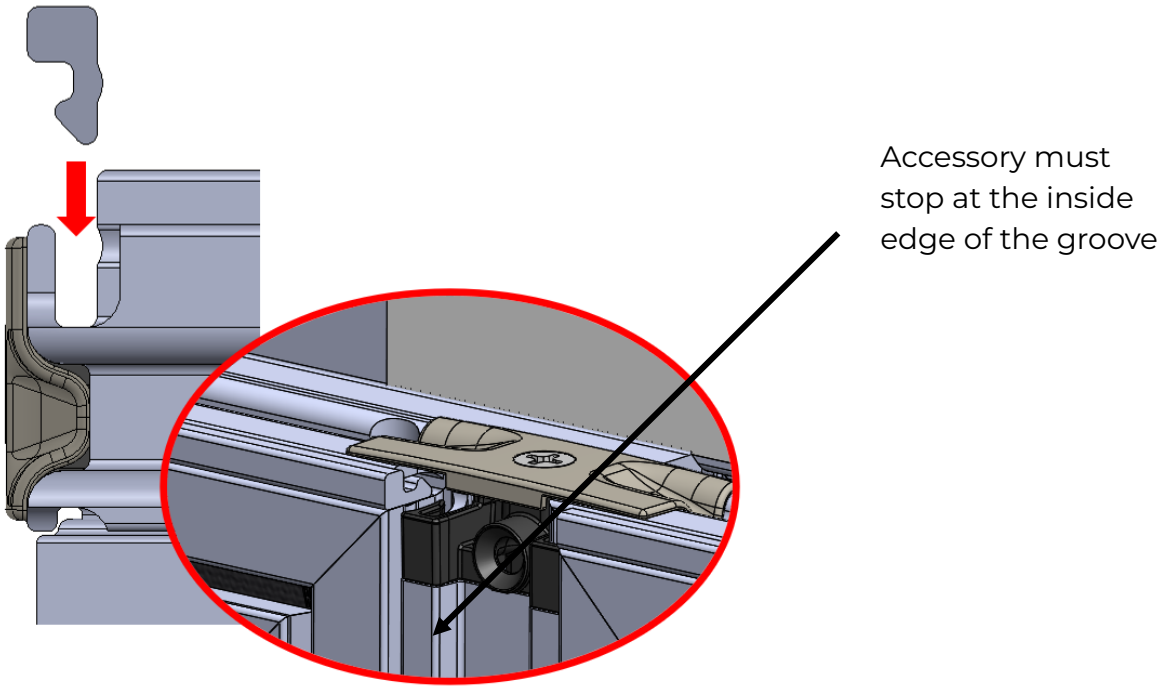

ATTENTION

If mulling shape-to-shape, follow step 35A
If mulling window-to-shape, follow step 35B

Step 35A

Shape-to-Shape

Using the Pecora sealant SE0034CL, inject the sealant through the injection port of the end cap IM3121BL until sealant fully seals the end cap IM3121BL. The end cap IM3121BL has enough sealant when sealant can be seen on two top areas of the sealing cap IM3122XX. With the help of a spreader or spatula, smooth the sealant to be flush to the edge of the frame.

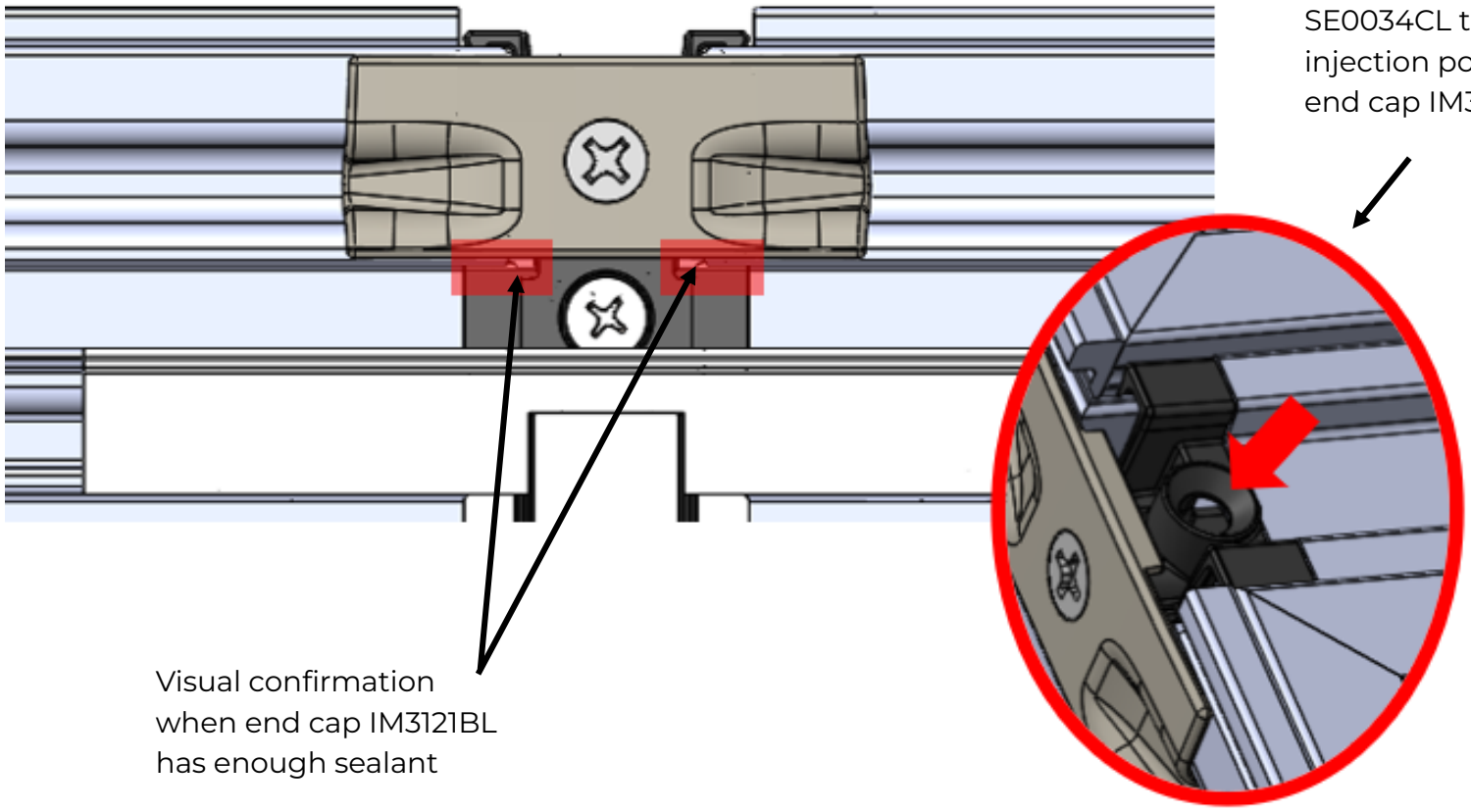

Step 35B
Window-to-Shape

Using the Pecora sealant SE0034CL, inject the sealant through the injection port of the end cap IM3121BL until sealant fully seals the end cap IM3121BL. The end cap IM3121BL has enough sealant when sealant can be seen on two top areas of the sealing cap IM3122XX.

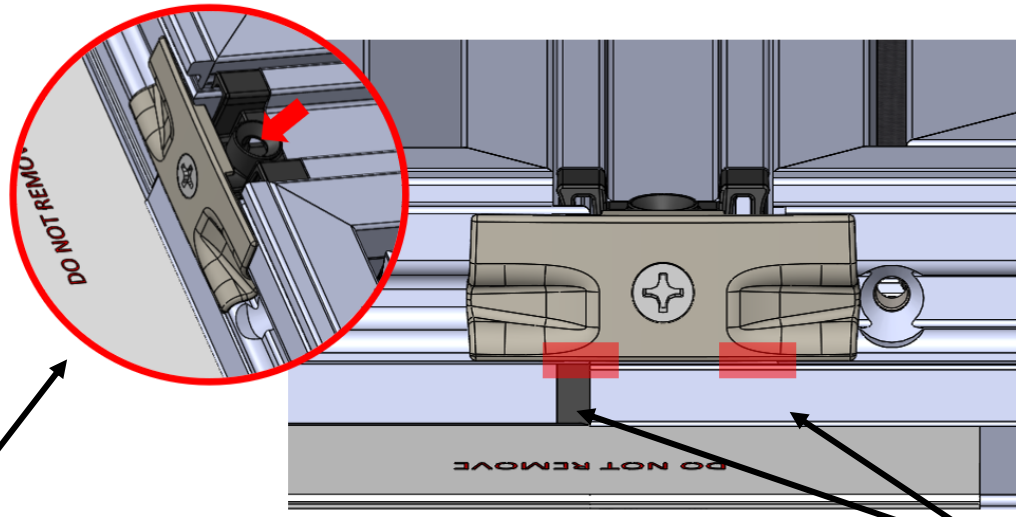

Inject Pecora sealant SE0034CL through the injection port of the end cap

Visual confirmation when end cap IM3121BL has enough sealant

Step 36
Window -to-Shape

Repeat step 35 for every mull joint

Step 37

Using the Pecora sealant SE0034CL, apply a continuous 3/16” diameter bead of sealant around the exterior perimeter of the fin/frame joint and on the interior side, at the edge of the fin miter, of the non-shape unit. For the bead of sealant on the interior side, the sealant should extend 1-1/2 inch along both direction of the fin/frame joints, away from the corner. Smooth the exterior perimeter bead of sealant.

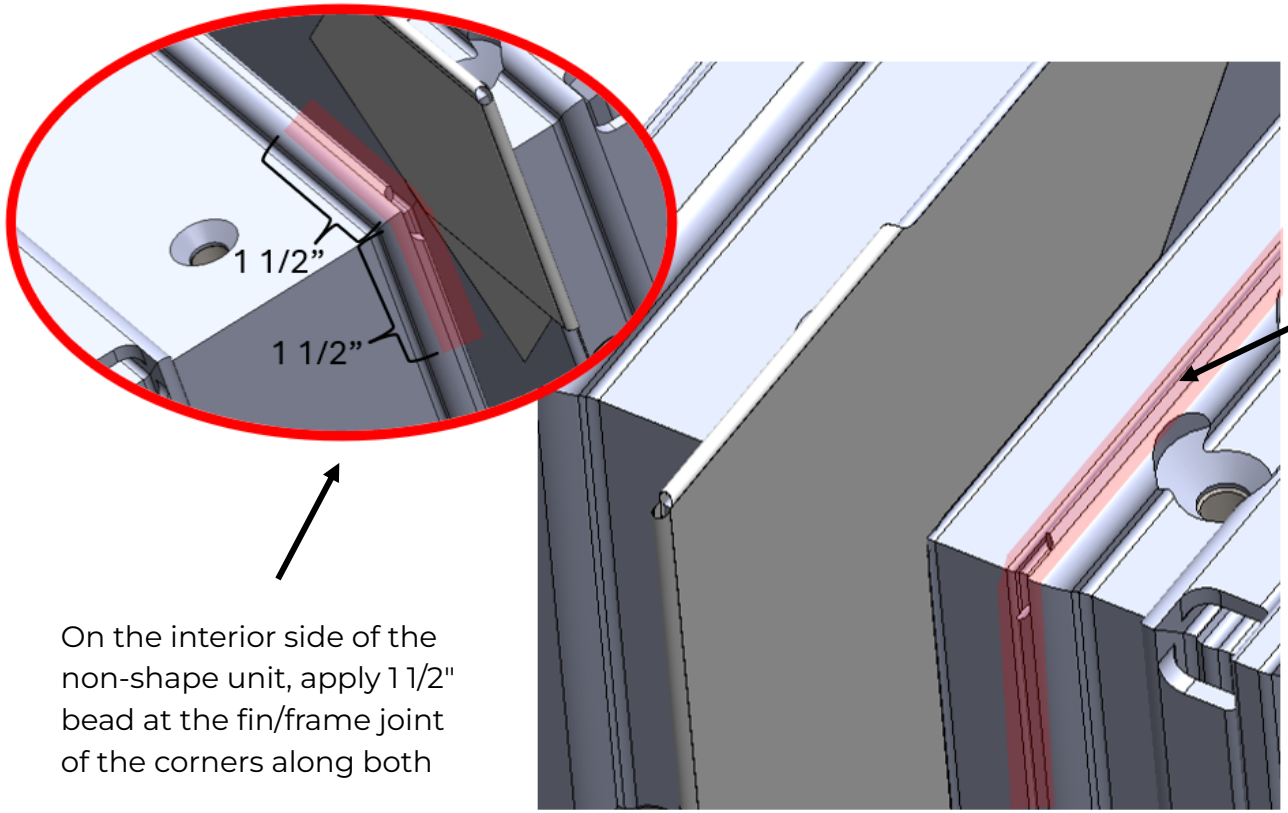

On the interior side of the non-shape unit, apply 1 1/2" bead at the fin/frame joint of the corners along both

Around the full perimeter of the fin/frame joint of the non-shape unit

Step 38

Take the exterior trim cover PX5028XX and trim the legs off about ½” from the end. Do not damage or remove the tape where the legs are not trimmed. Repeat on the other end.

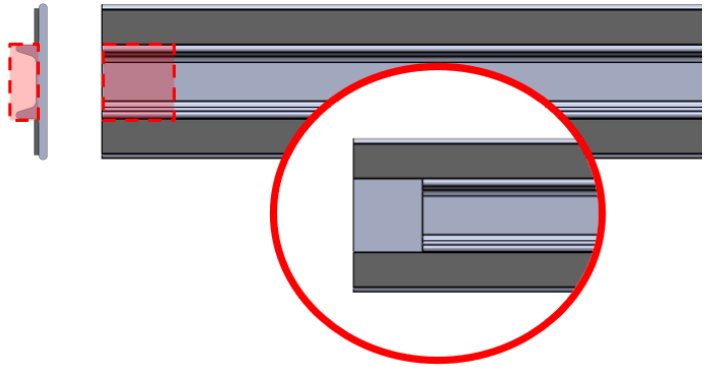

Step 39

Dry fit the trim cover PX5028XX onto the mull. The trim cover PX5028XX will be as long as the accessory. If too long, trim accordingly.

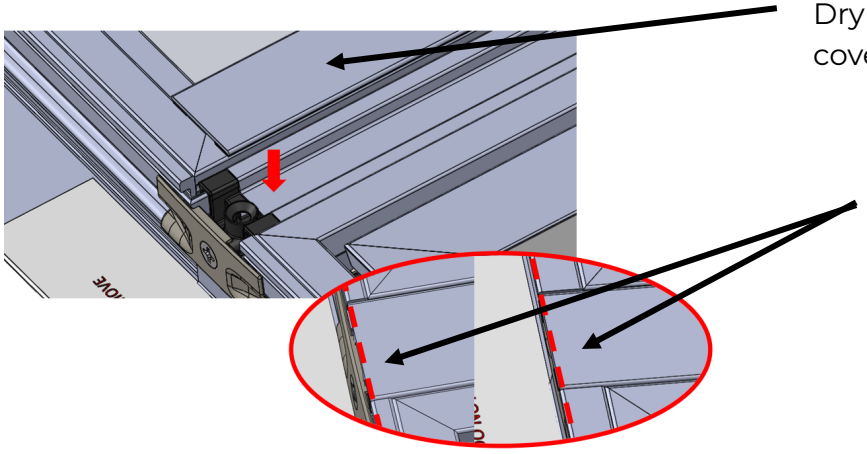

Step 40

Remove the backing on both foam on trim cover PX5028XX.

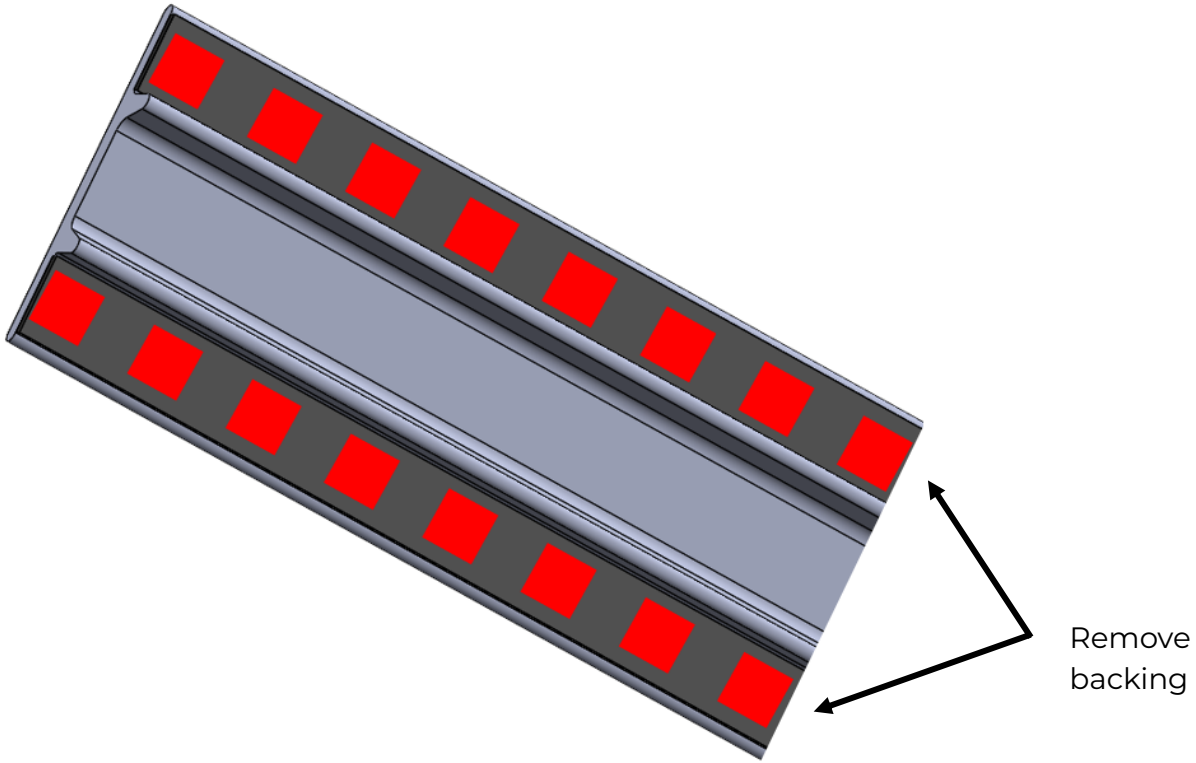

Step 41

Repeat step 38 through step 40 for every additional mull bar, if applicable.

Step 42

Prior to installing the mulled unit, fully insert a mull anchor RF4302GA into each end cap IM3121BL of every mull bar EX7308MI. Each mull bar EX7308MI must use two (2) mull anchors RF4302GA, one at each end.

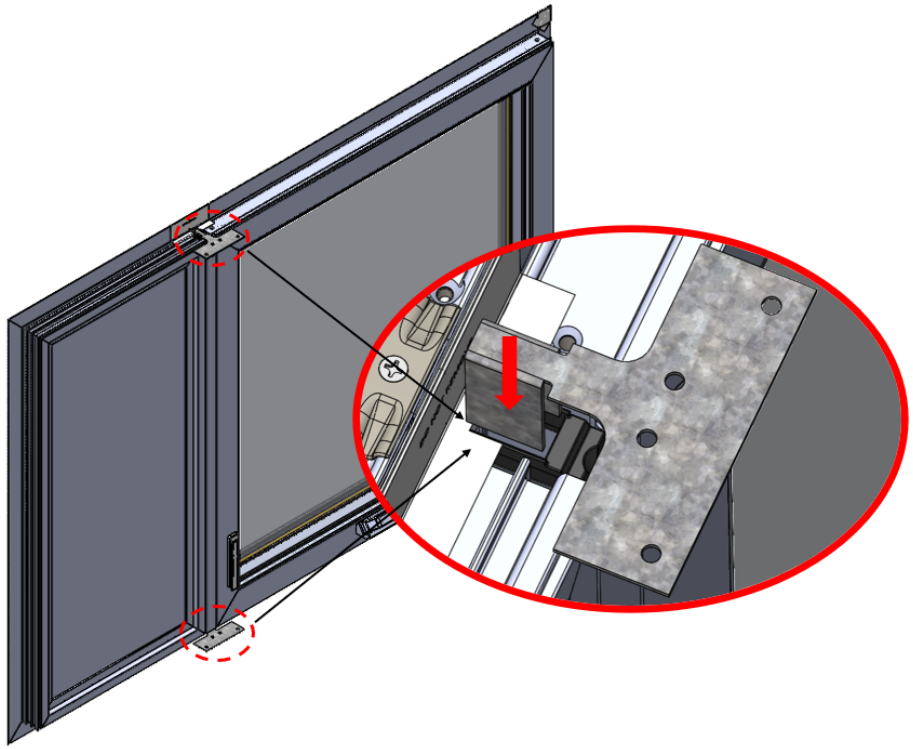

Step 43

Install the mulled unit into the rough opening by following the Milgard's Installation Recommendations for Mounting Fin Windows.

Step 44

Install two (2) of the supplied fasteners FA0821SS in the holes shown below into each mull anchor RF4302GA of every mull bar EX7308MI.

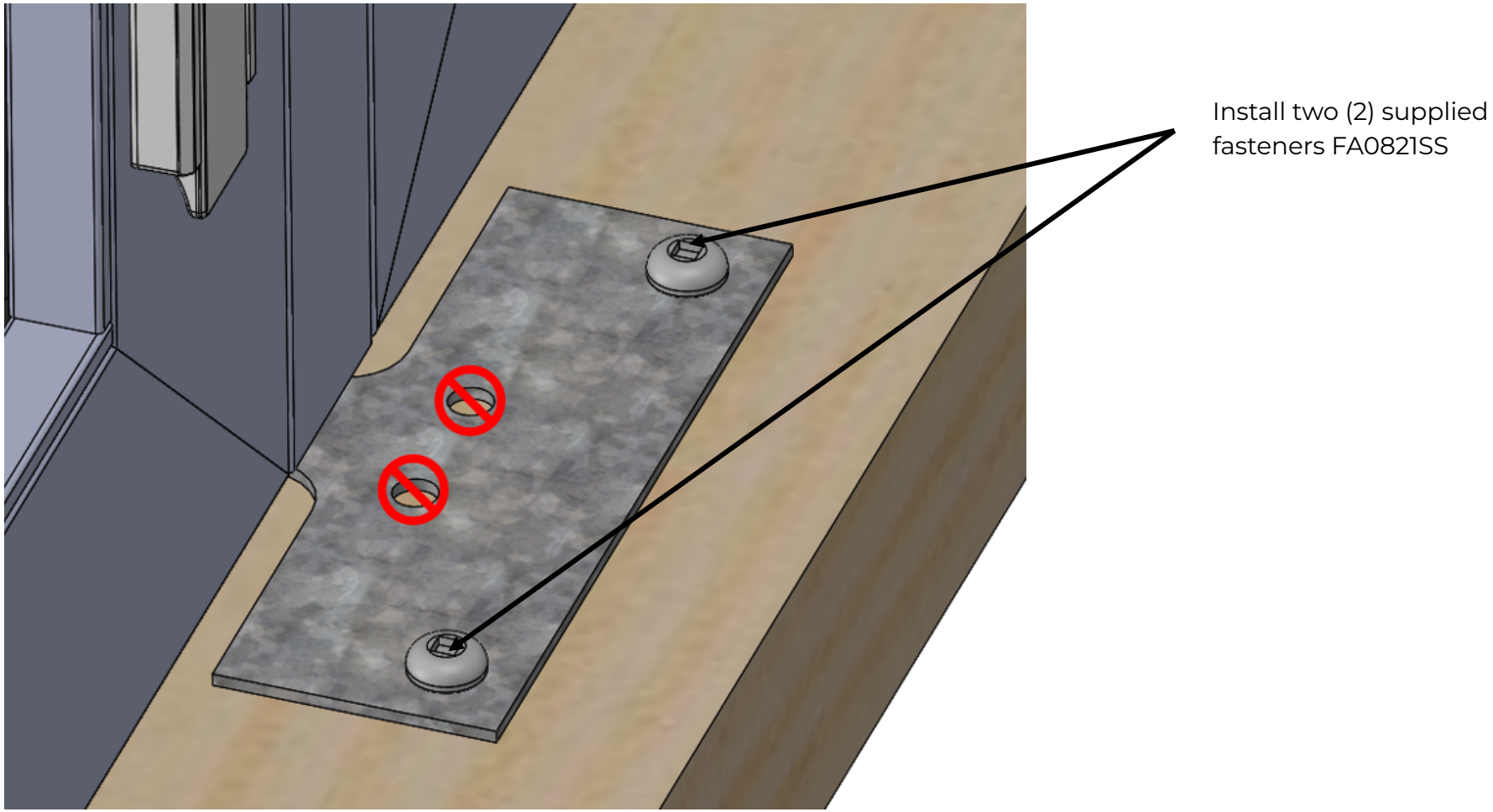

MILGARD®
WINDOWS and DOORS

Success means getting it right
in every detail, every time.
Build boldly with MILGARD.

milgard.com

By MITER Brands™

A family of leading window and door
brands, united by our passion for
quality and relentless pursuit of 100%.

miterbrands.com

©2026 MILGARD Windows and Doors, LLC. All rights reserved.