FLORIDA PRODUCT APPROVAL #39314

SERIES 7600, IMPACT RESISTANT, THERMALLY-BROKEN SLIDING GLASS DOOR INCLUDING INT./EXT. POCKETS & INSIDE/OUTSIDE 90° CORNERS

DESIGN PRESSURE RATING
+50.0 / -50.0 PSF

IMPACT RATING
RATED FOR LARGE & SMALL MISSILE IMPACT RESISTANCE

GENERAL NOTES:

1) THIS PRODUCT HAS BEEN DESIGNED & TESTED TO COMPLY WITH THE REQUIREMENTS OF THE CURRENT FLORIDA BUILDING CODE, NOT INCLUDING THE HIGH VELOCITY HURRICANE ZONE (HVHZ).

2) SHUTTERS ARE NOT REQUIRED PER FBC REQUIREMENTS, AS APPLICABLE.

3) DESIGN PRESSURES:
A. NEGATIVE DESIGN LOADS BASED ON TESTED PRESSURE AND GLASS TABLES ASTM E1300.
B. POSITIVE DESIGN LOADS BASED ON WATER TEST PRESSURE AND GLASS TABLES ASTM E1300.
C. DESIGN LOADS ARE BASED ON ALLOWABLE STRESS DESIGN, ASD.

4) ANCHORAGE: THE 33-1/3% STRESS INCREASE HAS NOT BEEN USED IN THE DESIGN OF THIS PRODUCT. MATERIALS, INCLUDING BUT NOT LIMITED TO STEEL SCREWS, THAT COME INTO CONTACT WITH OTHER DISSIMILAR MATERIALS SHALL MEET THE REQUIREMENTS OF THE CURRENT FLORIDA BUILDING CODE.

5) OVERALL SEALING/FLASHING STRATEGY FOR WATER RESISTANCE OF INSTALLATION SHALL BE DONE BY OTHERS AND IS BEYOND THE SCOPE OF THESE INSTRUCTIONS.

6) REFERENCES: DEWALT ULTRACON+, ANSI/AF&PA NDS FOR WOOD CONSTRUCTION AND ADM, ALUMINUM DESIGN MANUAL.

7) DOOR SIZES MUST BE VERIFIED FOR COMPLIANCE WITH EGRESS REQUIREMENTS PER THE CURRENT FLORIDA BUILDING CODE, AS APPLICABLE.

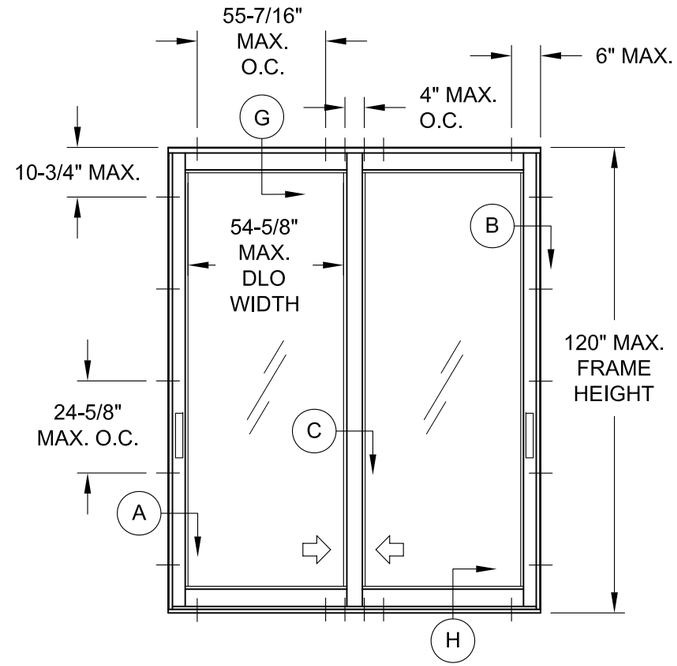

2P-2T XX ANCHOR LOCATIONS

SEE SHEET 2 & 3 FOR ADDITIONAL CONFIGURATION EXAMPLES, ANCHOR LAYOUTS AND NOTES.

ANCHOR NOTES:

1) FOR CONCRETE/CMU SUBSTRATE APPLICATIONS, USE ONLY APPROVED ANCHORS. SEE TABLE 1 FOR EMBEDMENT, EDGE DISTANCE AND SUBSTRATE REQUIREMENTS.

2) FOR OTHER SUBSTRATE APPLICATIONS SEE TABLE 1.

3) WOOD BUCKS DEPICTED AS 1X ARE LESS THAN 1-1/2" THICK. PROPERLY SECURED, 1X WOOD BUCKS ARE OPTIONAL IF UNIT IS INSTALLED DIRECTLY TO SOLID CONCRETE OR CMU. WOOD BUCKS DEPICTED AS 2X ARE 1-1/2" THICK OR GREATER. 1X AND 2X BUCKS (WHEN USED) SHALL BE DESIGNED TO PROPERLY TRANSFER LOADS TO THE STRUCTURE. BUCK DESIGN AND INSTALLATION IS THE RESPONSIBILITY OF THE ENGINEER OR ARCHITECT OF RECORD & TO BE REVIEWED BY THE BUILDING OFFICIAL.

4) METAL SUBSTRATE TO MEET MIN. STRENGTH AND THICKNESS REQUIREMENTS PER CURRENT FLORIDA BUILDING CODE AND TO BE REVIEWED BY THE AUTHORITY HAVING JURISDICTION.

5) IF SILL IS TIGHT TO SUBSTRATE, GROUT OR OTHER MATERIAL IS NOT REQUIRED. IF USED, NON-SHRINK, NON-METALLIC GROUT, MAX. 1/4" THICK & 3400 PSI MIN., (DONE BY OTHERS) MUST FULLY SUPPORT THE ENTIRE LENGTH OF THE SILL THAT IS NOT TIGHT TO THE SUBSTRATE, AND TRANSFER SHEAR LOAD TO SUBSTRATE. IF SUBSTRATE IS WOOD, 30# FELT PAPER OR MASTIC IS REQUIRED BETWEEN THE GROUT AND WOOD SUBSTRATE, OR AS APPROVED BY THE AUTHORITY HAVING JURISDICTION.

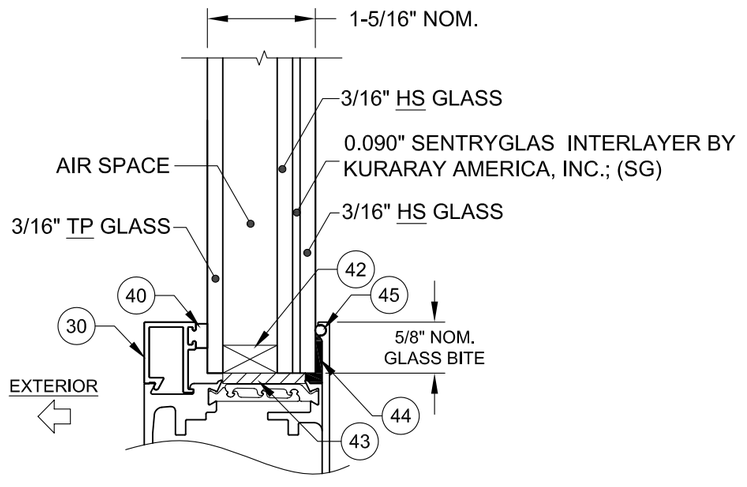

GLAZING DETAIL

Rev.#	Date	Drawn By	DWG No.	Sheet	Series
	12/15/23	JENS ROSOWSKI	FPA-7600-1	1 OF 8	SGD-7600
Rev.					

Rev.	Desc.	Title
	GEN NOTES & GLAZING	TB SLIDING GLASS DOOR (LM)

PREPARED BY A. LYNN MILLER
1070 TECHNOLOGY DRIVE
N. VENICE, FL 34275
(941) 480-1600

REGISTRATION #29296

COPYRIGHT © 2024 WESTERN, INC., LIMITED LICENSE TO MAKE COPIES FOR PERMITTING.

western window systems
2200 E RIVERVIEW DR
PHOENIX, AZ 85034
(877) 268-1300

ANTHONY LYNN MILLER
LICENSE
No. 58705
A. Lynn Miller
12/15/23
STATE OF FLORIDA
PROFESSIONAL ENGINEER

A. LYNN MILLER, P.E.
P.E.# 58705

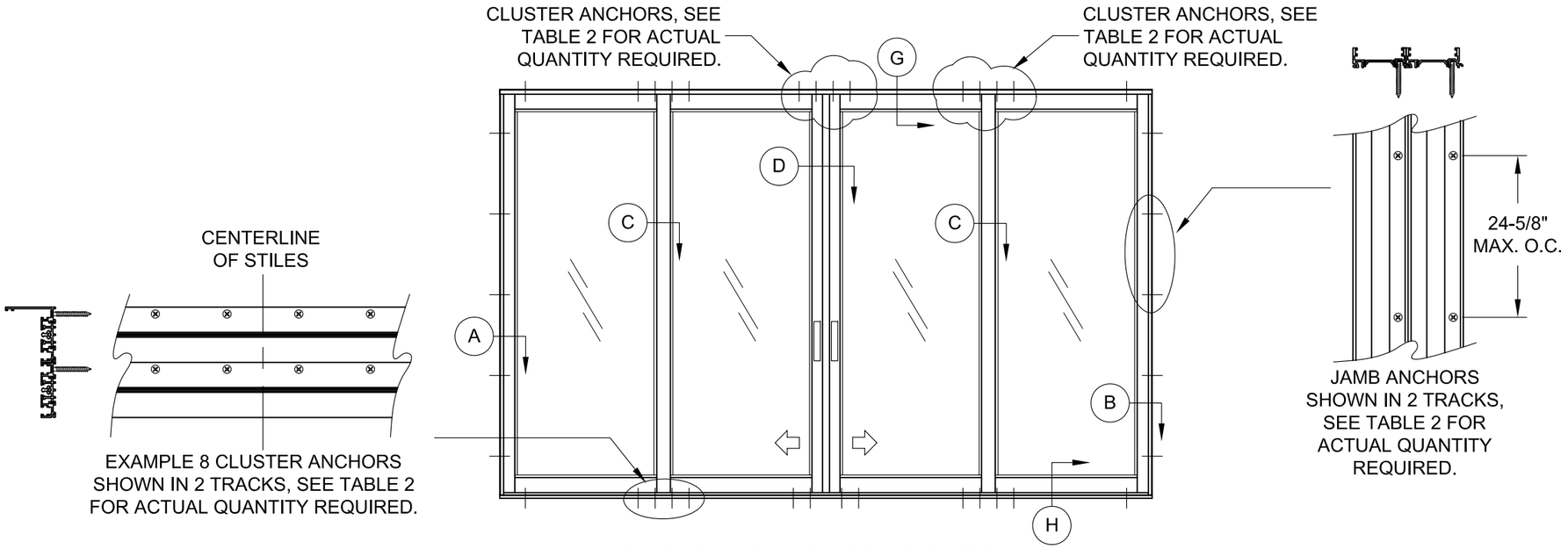

4P-2T, OXXO ANCHOR LOCATIONS

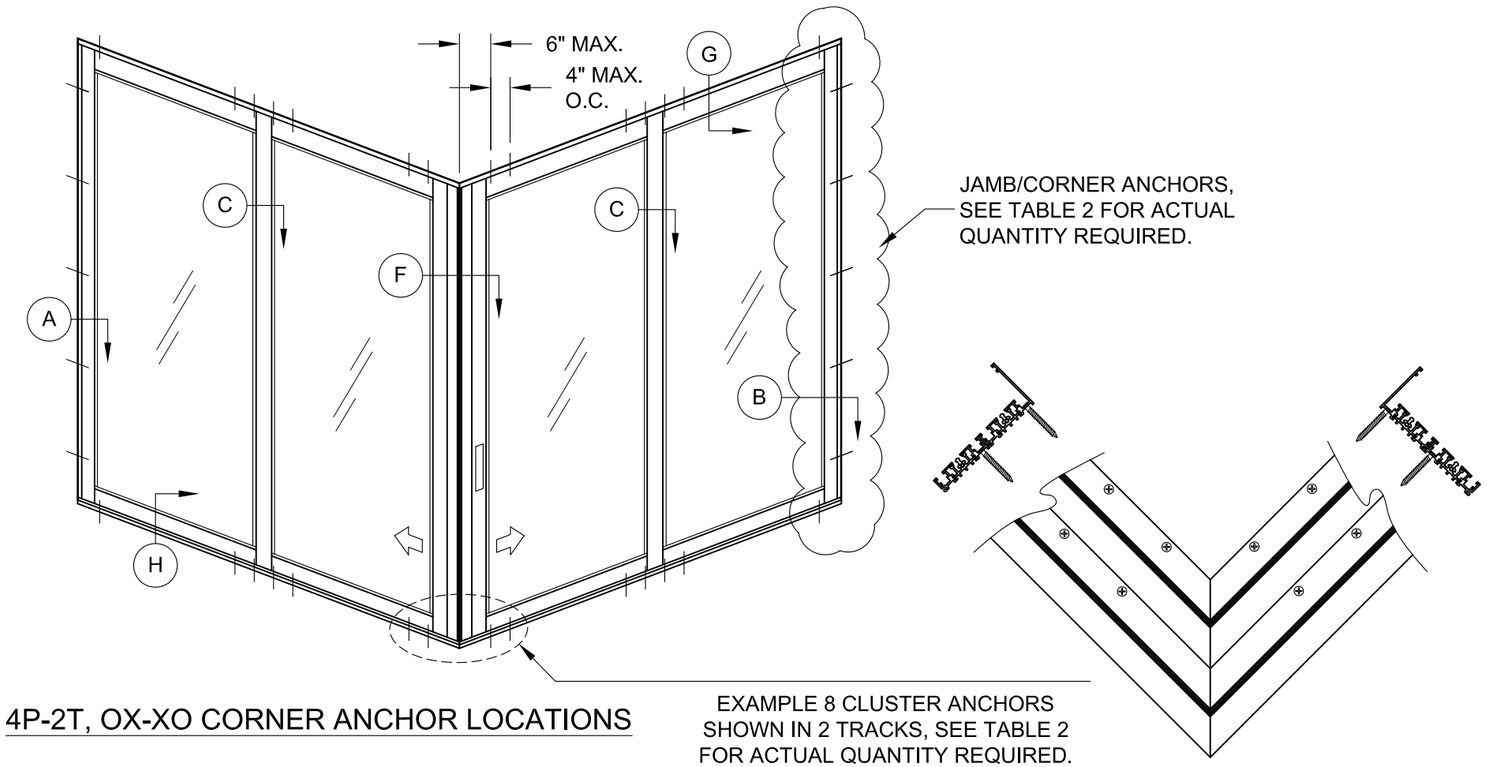

4P-2T, OX-XO CORNER ANCHOR LOCATIONS

CONFIGURATION & ANCHORAGE NOTES:

1) NOT ALL CONFIGURATIONS POSSIBLE ARE SHOWN.

2) ADDITIONAL CONFIGURATIONS USING ANY COMBINATION OF STILES, POCKETS OR NUMBER OF PANELS POSSIBLE.

3) MAXIMUM OF 8 TRACKS ALLOWED, NOT INCLUDING TRACKS USED ONLY FOR SCREEN PANELS.

4) POCKETS MAY BE INTERIOR OR EXTERIOR, CORNERS MAY BE INSIDE OR OUTSIDE.

5) POCKET WALL OR CAVITY CONSTRUCTION IS NOT PART OF THIS APPROVAL AND IS TO BE DESIGNED BY OTHERS AND REVIEWED BY THE AUTHORITY HAVING JURISDICTION.

6) SCREEN TRACKS NOT SHOWN. ANCHORAGE FOR SCREEN TRACKS ARE NON STRUCTURAL, INSTALL WITH SPACING AND QUANTITY AS NEEDED.

Rev.#	Date	

PREPARED BY A. LYNN MILLER
1070 TECHNOLOGY DRIVE
N. VENICE, FL 34275
(941) 480-1600

REGISTRATION #29296

COPYRIGHT © 2024 WESTERN, INC., LIMITED LICENSE TO MAKE COPIES FOR PERMITTING.

western window systems

2200 E RIVERVIEW DR
PHOENIX, AZ 85034
(877) 268-1300

Title	Desc.	Series
TB SLIDING GLASS DOOR (LM)	ELEVATIONS	SGD-7600

Date	Drawn By	DWG No.	Sheet	Rev.
12/15/23	JENS ROSOWSKI	FPA-7600-1	2 OF 8	

ANTHONY LYNN MILLER
LICENSE
No. 58705
A. Lynn Miller
12/15/23
STATE OF FLORIDA
PROFESSIONAL ENGINEER

A. LYNN MILLER, P.E.
P.E.# 58705

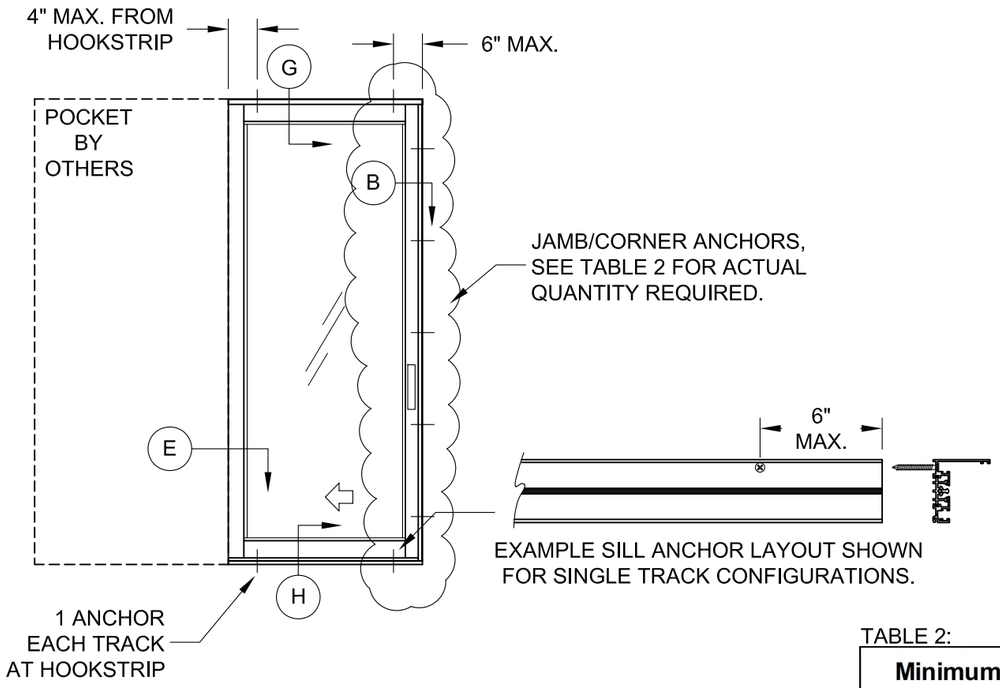

1P-1T, PX ANCHOR LOCATIONS

CONFIGURATION & ANCHORAGE NOTES:

1) NOT ALL CONFIGURATIONS POSSIBLE ARE SHOWN.

2) ADDITIONAL CONFIGURATIONS USING ANY COMBINATION OF STILES, POCKETS OR NUMBER OF PANELS POSSIBLE.

3) MAXIMUM OF 8 TRACKS ALLOWED, NOT INCLUDING TRACKS USED ONLY FOR SCREEN PANELS.

4) POCKETS MAY BE INTERIOR OR EXTERIOR, CORNERS MAY BE INSIDE OR OUTSIDE.

5) POCKET WALL OR CAVITY CONSTRUCTION IS NOT PART OF THIS APPROVAL AND IS TO BE DESIGNED BY OTHERS AND REVIEWED BY THE AUTHORITY HAVING JURISDICTION.

6) SCREEN TRACKS NOT SHOWN. ANCHORAGE FOR SCREEN TRACKS ARE NON-STRUCTURAL, INSTALL WITH SPACING AND QUANTITY AS NEEDED.

TABLE 1:

Anchor Type	Substrate	Min. Edge Distance	Min. Embedment or Metal Thickness
#10 Flathead SMS	Southern Pine (SG = 0.55)	9/16"	1-3/8"
	6063-T5 Aluminum	3/8"	0.060"
	A36 Steel	3/8"	0.050"
	Gr. 33 Steel Stud	3/8"	0.045" (18 Ga)
3/16" Trimfit Head" DeWalt Ultracon	Concrete (min. 3 ksi)	1"	1-3/4"
	Filled or Hollow Block (ASTM C90)	1"	1-1/4"
	Southern Pine (SG = 0.55)	1/2"	1"

1) ANCHORS MUST BE OF SUFFICIENT LENGTH SO THAT A MINIMUM OF 3 THREADS EXTEND BEYOND METAL SUBSTRATE.

TABLE 2:

Minimum Quantity of Anchors Required at Cluster and Jamb/Corner Across All Tracks

Nom. Panel Width & DLO			Door Frame Height & DLO									
			80" (72" DLO)		84" (76" DLO)		96" (88" DLO)		108" (100" DLO)		120" (112" DLO)	
			@ Head & Sill Cluster	@ Jamb & Corners	@ Head & Sill Cluster	@ Jamb & Corners	@ Head & Sill Cluster	@ Jamb & Corners	@ Head & Sill Cluster	@ Jamb & Corners	@ Head & Sill Cluster	@ Jamb & Corners
24"	18-5/8" DLO		4	4	4	4	4	4	4	6	6	6
30"	24-5/8" DLO		4	6	4	6	6	6	6	6	6	8
36"	30-5/8" DLO		6	6	6	6	6	6	6	8	8	8
42"	36-5/8" DLO		6	6	6	8	8	8	8	8	8	10
48"	42-5/8" DLO		6	8	6	8	8	8	8	10	10	10
54"	48-5/8" DLO		8	8	8	8	8	10	10	12	10	12
60"	54-5/8" DLO		8	10	8	10	10	10	10	12	12	14

1) TABLE SHOWS THE MINIMUM QUANTITY REQUIRED TO RESIST THE RATED WINDLOAD. EACH TRACK MUST HAVE AN EVEN NUMBER OF ANCHORS AND, DEPENDING ON YOUR CONFIGURATION, MAY EXCEED THE QUANTITY SHOWN IN TABLE.

EXAMPLE: A 48" X 96" REQUIRES 8 ANCHORS AT THE CLUSTER. IF IT IS A 3 TRACK CONFIGURATION, YOU WOULD HAVE TO EVENLY DISTRIBUTE 12 ANCHORS. (SEE IMAGE OF SILL AT RIGHT)

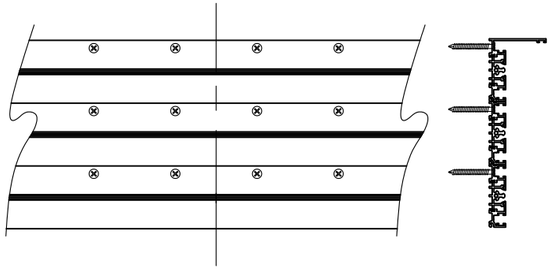

Rev.# | Date | By | Rev.

PREPARED BY A. LYNN MILLER
1070 TECHNOLOGY DRIVE
N. VENICE, FL 34275
(941) 480-1600

REGISTRATION #29296

COPYRIGHT © 2024 WESTERN, INC., LIMITED
LICENSE TO MAKE COPIES FOR PERMITTING.

western window systems

2200 E RIVERVIEW DR
PHOENIX, AZ 85034
(877) 268-1300

Date: 12/15/23
Drawn By: JENS ROSOWSKI
DWG No.: FPA-7600-1
Rev.

Title: TB SLIDING GLASS DOOR (LM)
Desc.: ELEVATIONS & ANCHOR DETAILS
Sheet: 3 OF 8
Series: SGD-7600

ANTHONY LYNN MILLER
LICENSE
No. 58705
12/15/23
STATE OF FLORIDA
PROFESSIONAL ENGINEER
A. LYNN MILLER, P.E.
P.E.# 58705

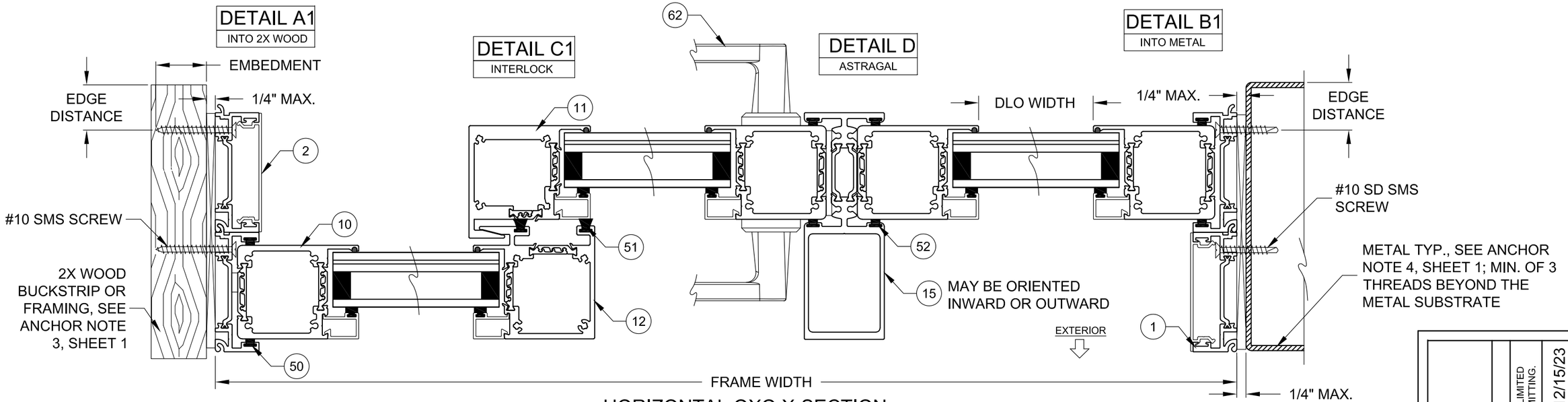

HORIZONTAL OXO X-SECTION

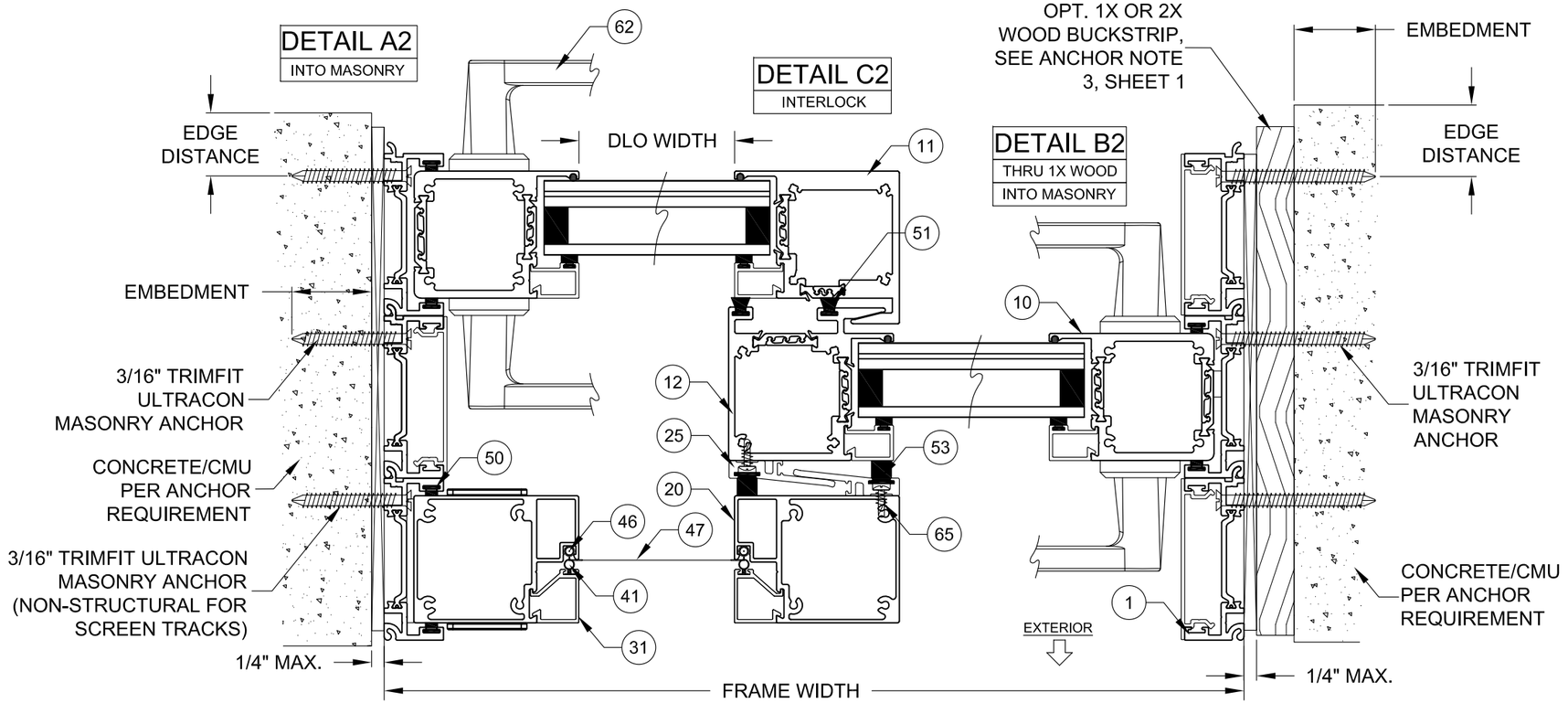

HORIZONTAL OX X-SECTION WITH OPT. SCREEN

NOTES

1) DETAILS APPLY TO ALL TRACK QUANTITIES AND ALL CONFIGURATIONS.

2) ANY INSTALLATION METHOD MAY BE USED ON ANY FRAME MEMBER.

3) ANCHORAGE FOR SCREEN TRACKS ARE NON-STRUCTURAL, INSTALL WITH SPACING AND QUANTITY AS NEEDED.

Rev.#	Date	Drawn By	DWG No.	Sheet	Series
	12/15/23	JENS ROSOWSKI	FPA-7600-1	4 OF 8	SGD-7600

PREPARED BY A. LYNN MILLER
1070 TECHNOLOGY DRIVE
N. VENICE, FL 34275
(941) 480-1600

REGISTRATION #29296

COPYRIGHT © 2024 WESTERN, INC., LIMITED LICENSE TO MAKE COPIES FOR PERMITTING.

western window systems
2200 E RIVERVIEW DR
PHOENIX, AZ 85034
(877) 268-1300

Title: TB SLIDING GLASS DOOR (LM)
Desc.: INSTALLATION 1

ANTHONY LYNN MILLER
LICENSE
No. 58705
A. Lynn Miller
12/15/23
STATE OF FLORIDA
PROFESSIONAL ENGINEER

A. LYNN MILLER, P.E.
P.E.# 58705

NOTES
1) DETAILS APPLY TO ALL TRACK QUANTITIES AND ALL CONFIGURATIONS.

2) ANY INSTALLATION METHOD MAY BE USED ON ANY FRAME MEMBER.

3) ANCHORAGE FOR SCREEN TRACKS ARE NON-STRUCTURAL, INSTALL WITH SPACING AND QUANTITY AS NEEDED.

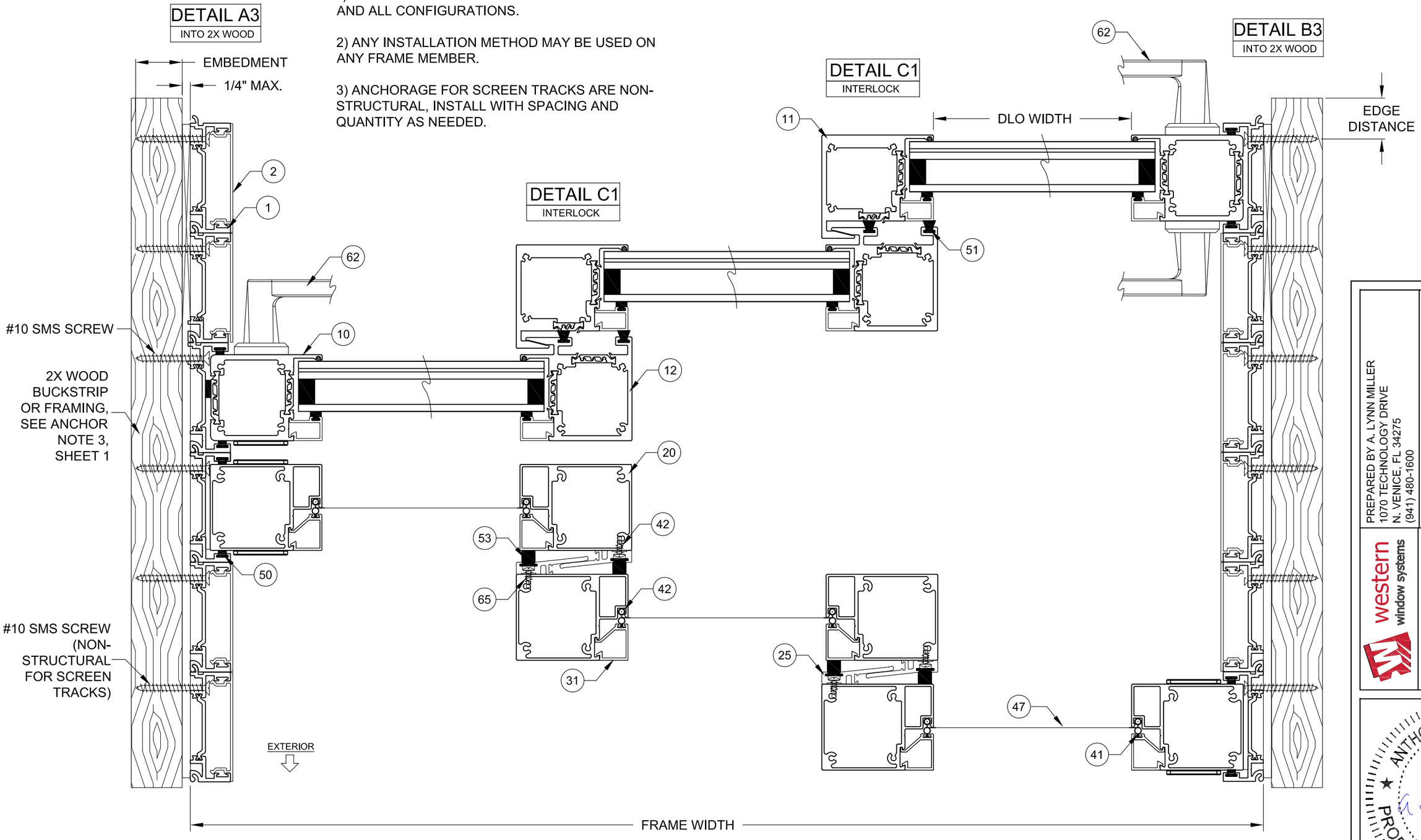

HORIZONTAL XXX X-SECTION WITH OPT. SCREEN

PREPARED BY A. LYNN MILLER
1070 TECHNOLOGY DRIVE
N. VENICE, FL 34275
(941) 480-1600

REGISTRATION #29296

COPYRIGHT © 2024 WESTERN, INC., LIMITED LICENSE TO MAKE COPIES FOR PERMITTING.

western window systems
2200 E RIVERVIEW DR
PHOENIX, AZ 85034
(877) 268-1300

Rev. #	Date	Drawn By	DWG No.	Sheet	Series	Desc.	Title
	12/15/23	JENS ROSOWSKI	FPA-7600-1	5 OF 8	SGD-7600	INSTALLATION 2	TB SLIDING GLASS DOOR (LM)

ANTHONY LYNN MILLER
LICENSE
No. 58705
A. Lynn Miller
12/15/23
STATE OF FLORIDA
PROFESSIONAL ENGINEER
A. LYNN MILLER, P.E.
P.E.# 58705

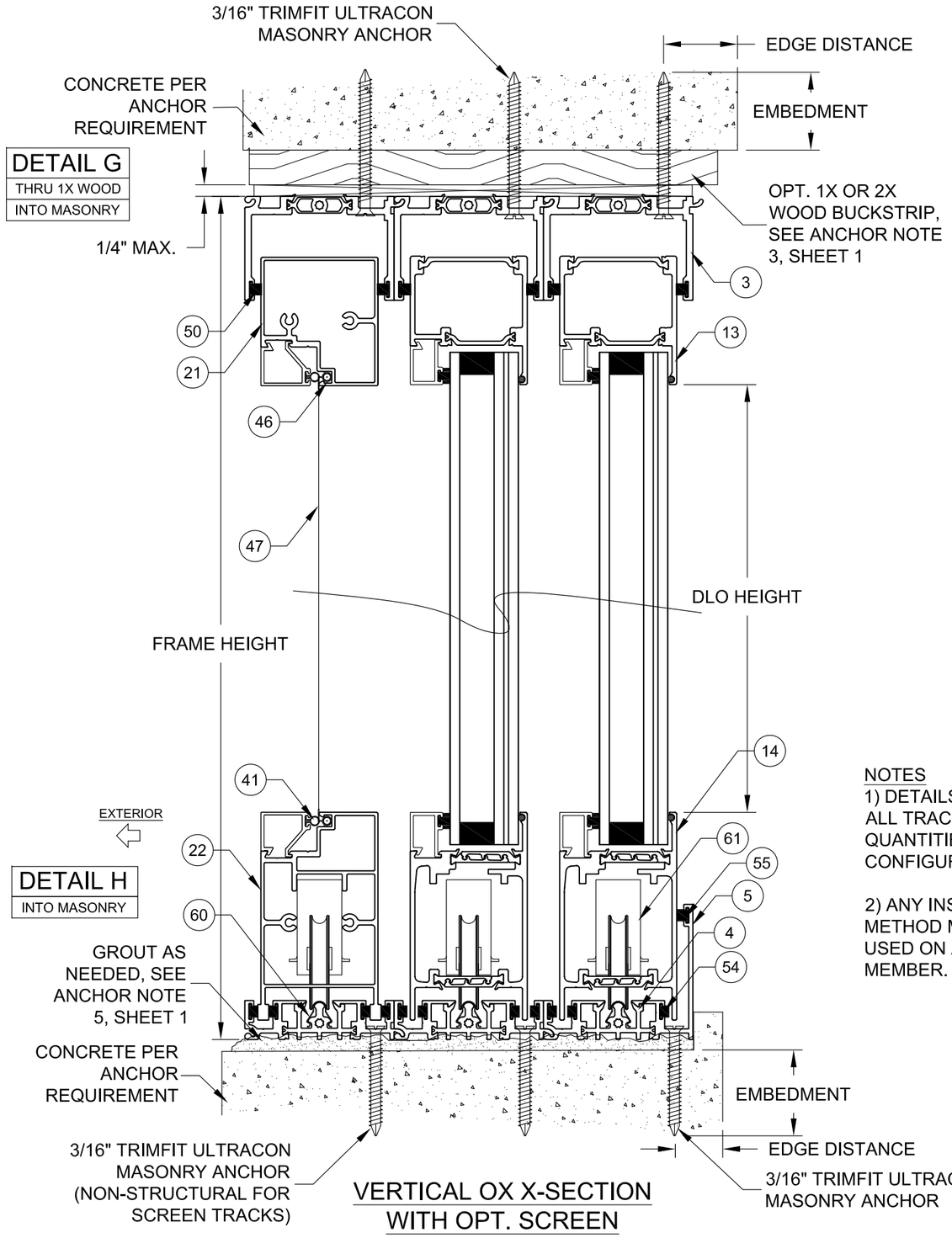

VERTICAL OX X-SECTION WITH OPT. SCREEN

NOTES

1) DETAILS APPLY TO ALL TRACK QUANTITIES AND ALL CONFIGURATIONS.

2) ANY INSTALLATION METHOD MAY BE USED ON ANY FRAME MEMBER.

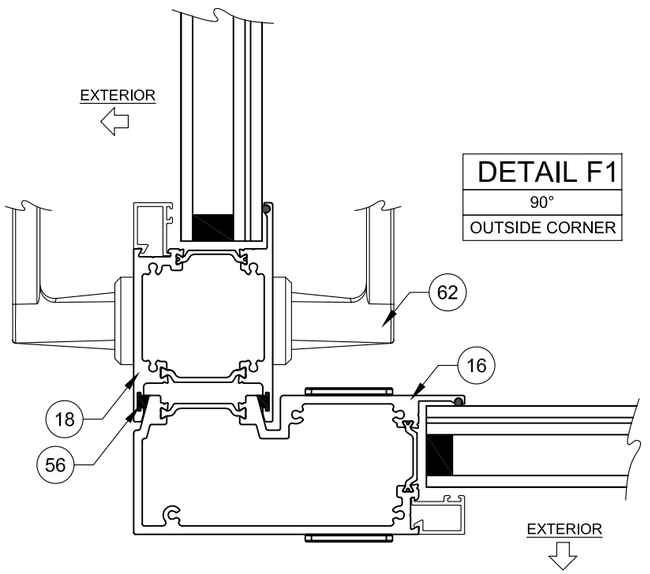

HORIZONTAL OUTSIDE CORNER X-SECTION

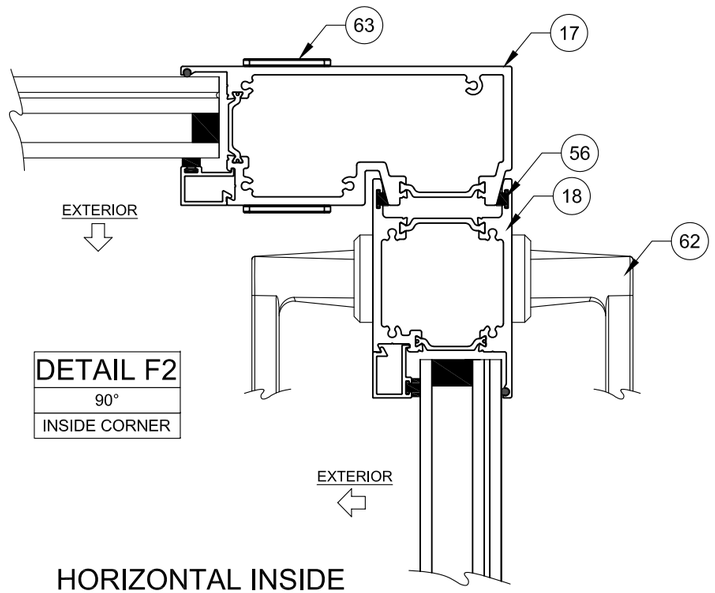

HORIZONTAL INSIDE CORNER X-SECTION

Rev.#	Date	By	Rev.

PREPARED BY A. LYNN MILLER
1070 TECHNOLOGY DRIVE
N. VENICE, FL 34275
(941) 480-1600

REGISTRATION #29296

COPYRIGHT © 2024 WESTERN, INC., LIMITED LICENSE TO MAKE COPIES FOR PERMITTING.

western window systems
2200 E RIVERVIEW DR
PHOENIX, AZ 85034
(877) 268-1300

Date	Drawn By	DWG No.	Sheet
12/15/23	JENS ROSOWSKI	FPA-7600-1	6 OF 8

Title	Desc.	Series
TB SLIDING GLASS DOOR (LM)	INSTALLATION 3	SGD-7600

ANTHONY LYNN MILLER
LICENSE
No. 58705
STATE OF FLORIDA
PROFESSIONAL ENGINEER
12/15/23

A. LYNN MILLER, P.E.
P.E.# 58705

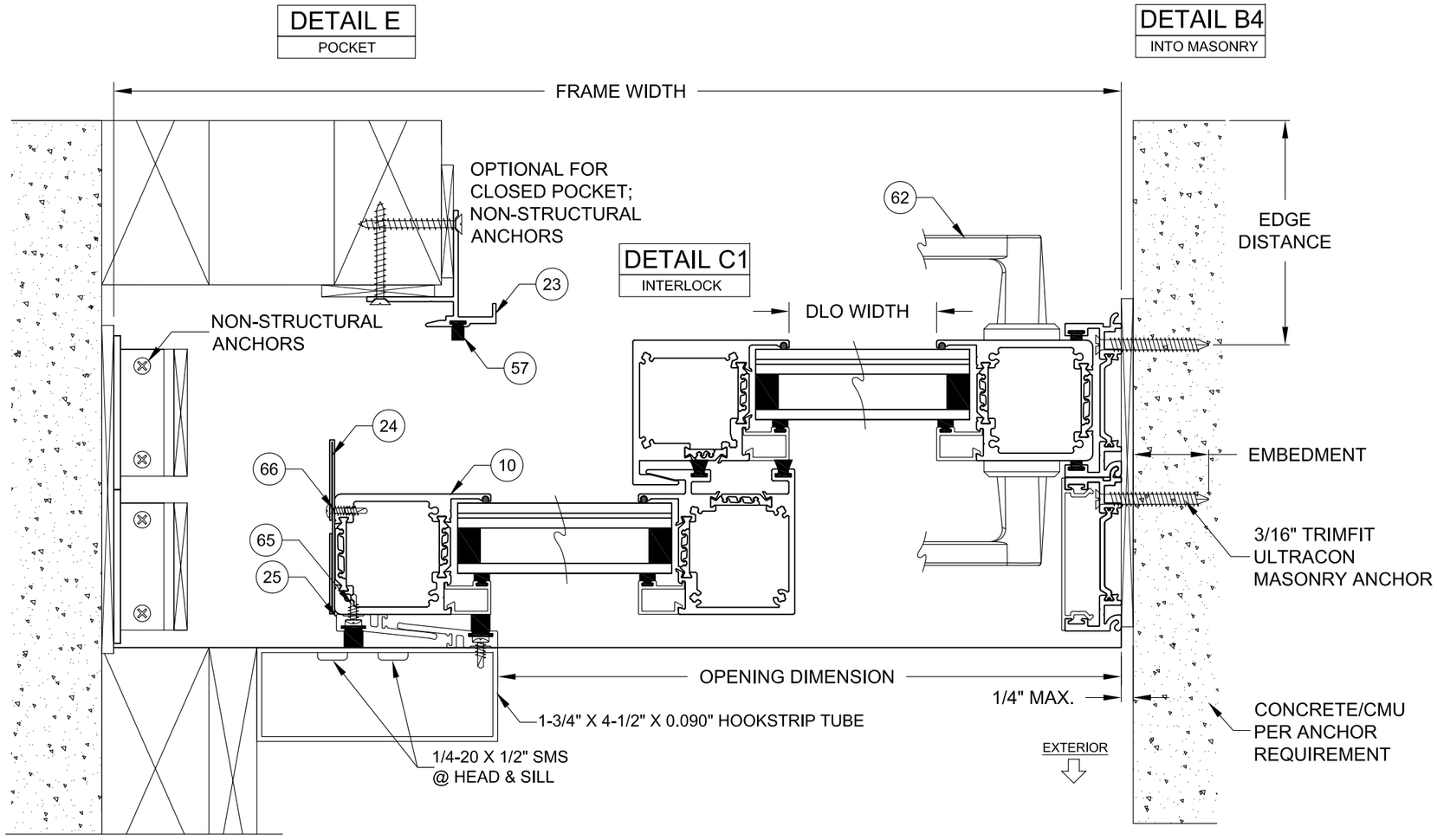

HORIZONTAL PXX X-SECTION
INTERIOR, CLOSED POCKET

EXTERIOR AND/OR OPEN
POCKET SIMILAR

NOTES

1) DETAILS APPLY TO ALL TRACK QUANTITIES AND ALL CONFIGURATIONS.

2) ANY INSTALLATION METHOD MAY BE USED ON ANY FRAME MEMBER.

3) INTERIOR OR EXTERIOR POCKETS APPLICABLE FOR ALL INSTALLATION METHODS. POCKET WALL OR CAVITY IS NOT PART OF THIS APPROVAL AND IS TO BE DESIGNED BY OTHERS AND REVIEWED BY THE AUTHORITY HAVING JURISDICTION.

Rev.#	Date	Drawn By	DWG No.	Rev.
	12/15/23	JENS ROSOWSKI	FPA-7600-1	

PREPARED BY A. LYNN MILLER
1070 TECHNOLOGY DRIVE
N. VENICE, FL 34275
(941) 480-1600
REGISTRATION #29296

COPYRIGHT © 2024 WESTERN, INC., LIMITED
LICENSE TO MAKE COPIES FOR PERMITTING.

western window systems

2200 E RIVERVIEW DR
PHOENIX, AZ 85034
(877) 268-1300

Series	Desc.	Title	Sheet	Rev.
SGD-7600	INSTALLATION 4	TB SLIDING GLASS DOOR (LM)	7 OF 8	

ANTHONY LYNN MILLER
LICENSE
No. 58705
A. Lynn Miller
12/15/23
STATE OF
FLORIDA
PROFESSIONAL ENGINEER

A. LYNN MILLER, P.E.
P.E.# 58705

TABLE 3:

Item #	Description	Material
1	Frame Jamb	TB 6063 T5 Alum.
2	Jamb Anchor Cover	6063 T5 Alum.
3	Frame Head	TB 6063 T5 Alum.
4	Frame Sill	TB 6063 T5 Alum.
5	Frame Sill Riser	6063 T5 Alum.
10	Panel Stile	TB 6063 T5 Alum.
11	HD Interlock	TB 6063 T5 Alum.
12	Interlock	TB 6063 T5 Alum.
13	Top Rail	TB 6063 T5 Alum.
14	Bottom Rail	TB 6063 T5 Alum.
15	Astragal	TB 6063 T5 Alum.
16	Outside Corner Stile	TB 6063 T5 Alum.
17	Inside Corner Stile	TB 6063 T5 Alum.
18	Corner Lead Stile	TB 6063 T5 Alum.
20	Screen Stile	6063 T5 Alum.
21	Screen Top Rail	6063 T5 Alum.
22	Screen Bottom Rail	6063 T5 Alum.
23	Hookstrip	6063 T5 Alum.
24	Pocket Closer	6063 T5 Alum.
25	Addon Interlock	6063 T5 Alum.
30	Panel Beading	6063 T5 Alum.
31	Screen Beading	6063 T5 Alum.
40	Panel Beading Gasket	Vinyl
41	Screen Beading Gasket	Vinyl
42	IG Spacer	Varies
43	Setting Block	EPDM
44	Silicone Backbedding	Dow-791 or 983
45	Glazing Leg Chord	EPDM
46	Screen Spline	Vinyl
47	Screen Cloth	Fiberglass
50	Jamb/Head Woolpile	
51	Interlock Woolpile	
52	Astaragal Woolpile	
53	Screen Stile Woolpile	
54	Track Woolpile	
55	Sill Riser Woolpile	
56	Corner Stile Woolpile	
57	Hookstrip Woolpile	
60	Track Cap	Stainless Steel
61	Panel Roller	Stainless Steel
62	Handle/Lock	Varies
63	#8 X 3/4" PH Frame Assembly Screw	Stainless Steel
64	5/16" Rod & Nut Panel Assembly Screw	Steel
65	Interlock Screw	Stainless Steel
66	Pocket Closer Screw	Stainless Steel

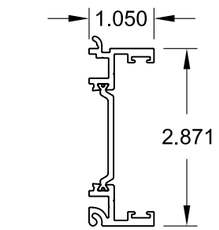

1 FRAME JAMB

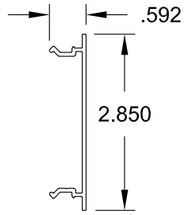

2 JAMB ANCHOR COVER

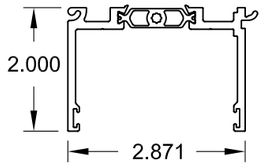

3 FRAME HEAD

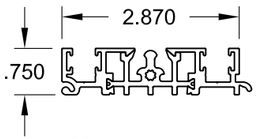

4 FRAME SILL

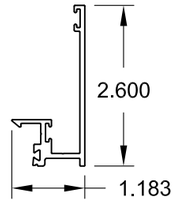

5 FRAME SILL RISER

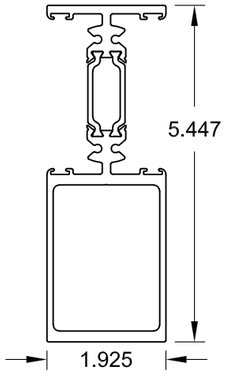

15 ASTRAGAL

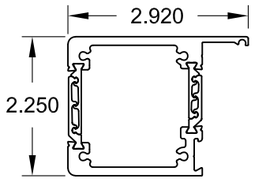

10 PANEL STILE

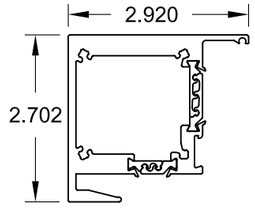

11 HD INTERLOCK

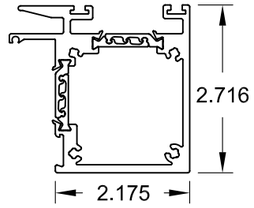

12 INTERLOCK

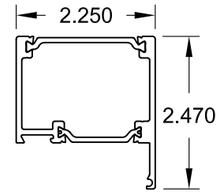

13 TOP RAIL

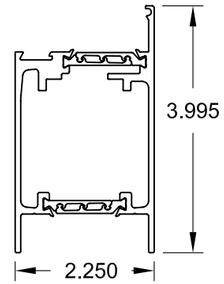

14 BOTTOM RAIL

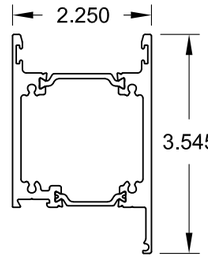

18 CORNER LEAD STILE

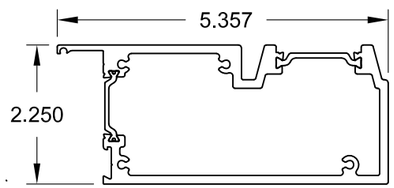

16 OUTSIDE CORNER STILE

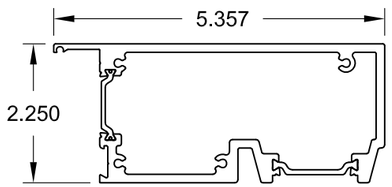

17 INSIDE CORNER STILE

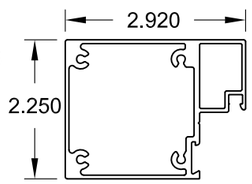

20 SCREEN STILE

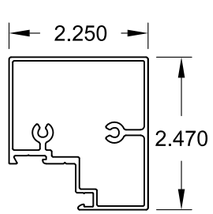

21 SCREEN TOP RAIL

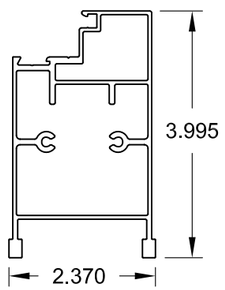

22 SCREEN BOTTOM RAIL

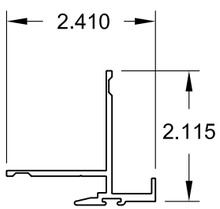

23 HOOKSTRIP

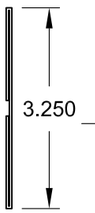

24 POCKET CLOSER

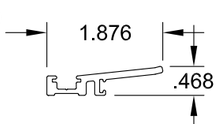

25 ADDON INTERLOCK

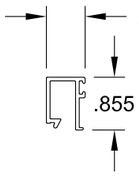

30 PANEL BEADING

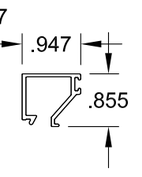

31 SCREEN BEADING

Rev. #
Date
Rev.

PREPARED BY A. LYNN MILLER
1070 TECHNOLOGY DRIVE
N. VENICE, FL 34275
(941) 480-1600

REGISTRATION #29296

COPYRIGHT © 2024 WESTERN, INC., LIMITED
LICENSE TO MAKE COPIES FOR PERMITTING.

western window systems

2200 E RIVERVIEW DR
PHOENIX, AZ 85034
(877) 268-1300

Rev.	Date	Drawn By	DWG No.	Sheet	Series
	12/15/23	JENS ROSOWSKI	FPA-7600-1	8 OF 8	SGD-7600

Title: TB SLIDING GLASS DOOR (LM)
Desc.: BOM & EXTRUSIONS

ANTHONY LYNN MILLER
LICENSE
No. 58705
A. Lynn Miller
12/15/23
STATE OF FLORIDA
PROFESSIONAL ENGINEER
A. LYNN MILLER, P.E.
P.E.# 58705