CLASSIC SERIES 670 CASEMENT WINDOW

PRODUCT DATA SHEET

FOR MORE CAD DETAILS SCAN HERE

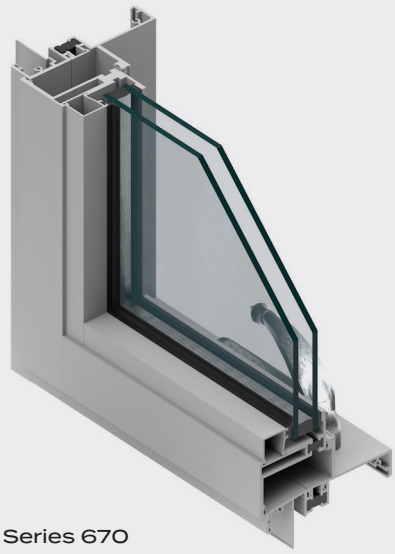

Classic Series 670 Casement Window

The Series 670 Casement Window, which hinges on the side and swings outward to the left or right, combines clean design and optimal performance with a commitment to superior craftsmanship. Designed with a 4.5” frame depth, it can be integrated with our hinged doors, sliding doors, and fixed window walls for maximum views and ventilation. It is available in widths from 16” to 42” and heights from 16” to 120.” The window is tested for air, water, and structural performance and is certified by the NFRC and AAMA.

Energy Efficiency

- Low-E, argon-filled dual-paned glass
- .50 U-value

Options

The Series 670 Casement opens easily with the turn of the handle and a light push. It is available in widths from 16” to 36” and heights from 16” to 72”.

Finishes and Colors

Finishes are available in-stock or as designer selections, and they can be customized to match nearly any color. Bronze Anodized and Satin Anodized come standard with a Class 1 coating thickness for increased smoothness and durability. Our designer colors include a high-quality paint finish that conforms to a minimum rating of AAMA-2605, currently the highest rating for organic finishes.

Performance Table

Frame Depth	4 1/2”
AAMA Product Designation (AAMA/WDMA/CSA101/I.S.2/A440 Designation)	CW-PG50-36x60-C
Test Configuration	36” x 60” X
Air Infiltration (Per ASTM E 283)	.04 cfm/sf @1.57 psf
CSA A440 Air	N/A
Water Resistance (Per ASTM E 547)	9.2 psf
Uniform Load Deflection (Per ASTM E 330)	50 psf
Uniform Load Structural (Per ASTM E 330)	75 psf
Forced Entry Resistance	ASTM F588 Type B Grade 10 and CAWM 301 Type II
U-Factor (Per NFRC 100)*	0.48
CR (Per NFRC 500)*	43
CRF Frame (Per AAMA 1503)	56

Actual values may vary depending on product specifications and configuration.

* Glass Makeup = 1” OA E366/Argon/Clear

CLASSIC SERIES 670
CASEMENT WINDOW

PRODUCT DATA SHEET

FOR MORE
CAD DETAILS
SCAN HERE

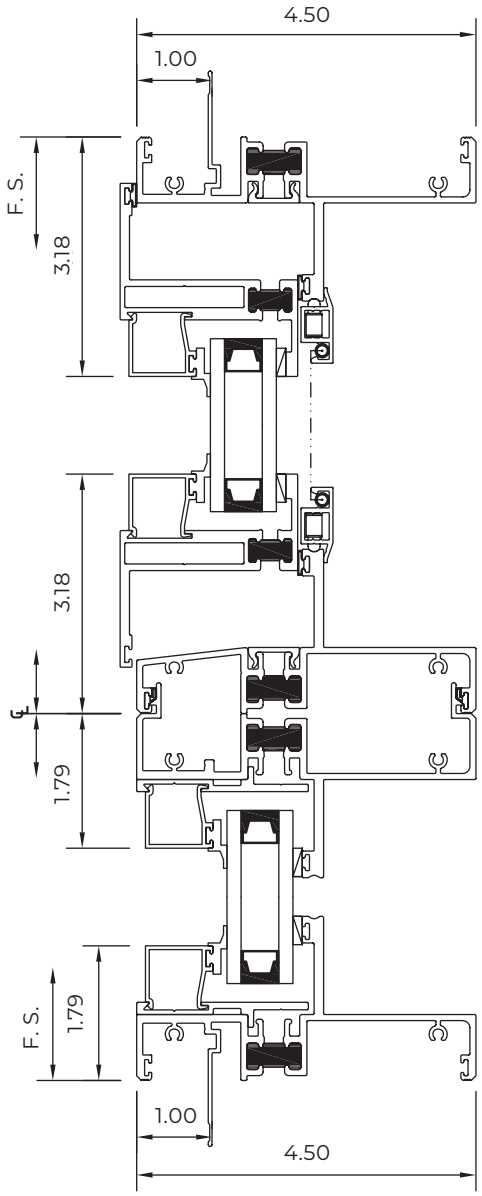

Hinged Over Fixed Vertical Section
1.00” Nail-Fin Frame

CLASSIC SERIES 670
CASEMENT WINDOW

PRODUCT DATA SHEET

FOR MORE
CAD DETAILS
SCAN HERE

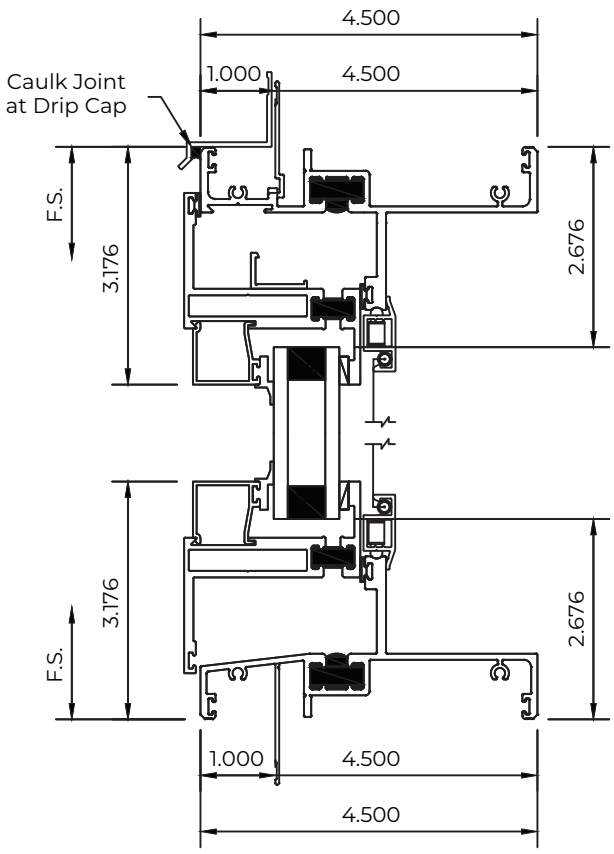

Standard Sill

CLASSIC SERIES 670
CASEMENT WINDOW

PRODUCT DATA SHEET

FOR MORE
CAD DETAILS
SCAN HERE

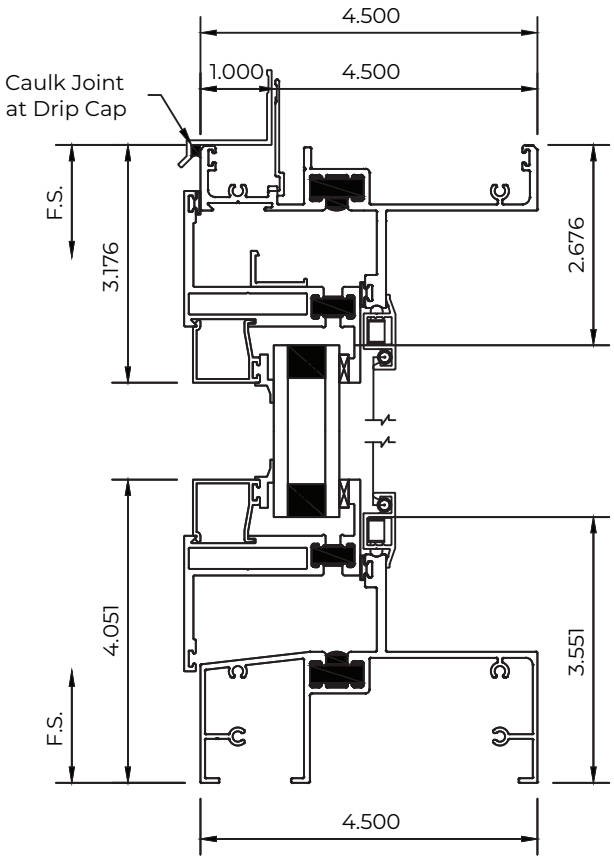

High Barrier Sill

CLASSIC SERIES 670
CASEMENT WINDOW

PRODUCT DATA SHEET

FOR MORE
CAD DETAILS
SCAN HERE

